UNISYS

U 5000/30, U 5000/35, U 5000/50, and U 5000/55

System V

Diagnostics Reference Manual

October 1990

Printed in U S America
UP–14802

Priced Item

UNISYS

U 5000/30, U 5000/35, U 5000/50, and U 5000/55 System V

Diagnostics Reference Manual

Copyright © 1990 Unisys Corporation
All rights reserved.
Unisys is a registered trademark of Unisys Corporation.

October 1990

Printed in U S America
UP-14802

Priced Item

Any names, places, and/or events used in this publication are not intended to correspond to any individual, group, or association existing, living, or otherwise. Any similarity or likeness of the names, places, and/or events with the names of any individual, living or otherwise, or that of any group or association is purely coincidental and unintentional.

NO WARRANTIES OF ANY NATURE ARE EXTENDED BY THIS DOCUMENT. Any product and related material disclosed herein are only furnished pursuant and subject to the terms and conditions of a duly executed Program Product License or Agreement to purchase or lease equipment. The only warranties made by Unisys, if any, with respect to the products described in this document are set forth in such License or Agreement. Unisys cannot accept any financial or other responsibility that may be the result of your use of the information in this document or software material, including direct, indirect, special, or consequential damages.

You should be very careful to ensure that the use of this information and/or software material complies with the laws, rules, and regulations of the jurisdictions with respect to which it is used.

The information contained herein is subject to change without notice. Revisions may be issued to advise of such changes and/or additions.

RESTRICTED RIGHTS LEGEND: Use, duplication, or disclosure by the United States government is subject to restrictions as set forth in subparagraph (c) (1) of the Commercial Computer Software - Restricted Rights Clause at FAR 52.227-19 or subparagraph (c) (1) (iii) of the Rights in Technical Data and Computer Software clause at DFARS 252.227-7013. Unisys Corporation.

Copyright © 1988 by NCR Corporation

Motorola is a registered trademark of Motorola Corporation.
UNIX is a registered trademark of AT&T in the USA and other countries.

UP-14802

About This Document

Purpose

This guide describes the Start-Up Subsystem (SUS), a resident firmware program that controls the events that occur when power is applied to the system or when the reset button is activated. This guide also explains the in-service diagnostics that may be used to check the system and provides a list of the error codes that are displayed when an error is detected.

Scope

This guide can help you accomplish tasks centering around software installation. For example, it provides information and procedures for:

- Start-Up Diagnostics
- SUS Characteristics
- Warm Start
- Cold Start
- Error Codes

Audience

Although all of the procedures outlined in this book are explained thoroughly, they should be performed by an experienced user of the UNIX® operating system. The user should also know the C programming language and be familiar with hardware devices and their interface to the system, (i.e., programmers, analysts, and support personnel).

Prerequisites

This guide assumes that your U 5000 system is contained in one or more standard Unisys cabinets, and includes one or more disk units, tape units, and a system console.

Your system hardware must be installed according to procedures described in the Hardware Installation Guide prior to installing system software. If your hardware system was pre-configured you should verify that all hardware components are installed (also described in the Hardware Installation Guide).

How to Use This Document

Read this section to become acquainted with the notation and documentation conventions. Then, read thoroughly the "Start-Up Diagnostics" section.

UNIX is a registered trademark of AT&T in the USA and other countries.

Organization

This guide contains three sections:

Section 1. Start-Up Diagnostics

The Start-Up Subsystem (SUS) is a Read Only Memory (ROM) resident firmware program. This section describes the SUS characteristics, the start-up functions, and the functional sequence of events that the SUS firmware program performs. It also discusses diagnostic hardware names and general microprocessor tests.

Section 2. In-Service Diagnostics

This section describes the in-service diagnostics operating procedures that are performed through different maintenance and diagnostics menus. The section is arranged so that each subsection is associated with a specific menu (or sequence of menus), and the subsections describe the different functions that are selected from that menu.

Section 3. Error Codes

The in-service diagnostics system (DS) detects and reports information about errors that occur during the processing of an in-service diagnostic test. This section describes all valid in-service diagnostic error code field values that the DS generates.

Notation Conventions

Throughout this manual, the following notation conventions are used.

User Input — User input (such as commands, options, and arguments to commands), environment variables, and the names of directories and files appear in the bold typeface shown at the left.

Variable User Input	Names of variables to which values must be assigned (such as passwords) appear in the bold italic typeface shown at the left.
`System Output`	System output (such as prompt signs and responses to commands) appears in the typeface shown at the left.
`Variable System Output`	System output that varies (such as filenames that change) appears in the italic typeface shown at the left.
`Menu Titles and Selections`	Menu titles and selections appear in the bold typeface shown at the left.
`xxx` `XXX`	The symbols *xxx* and *XXX* represent numbers and characters that may vary when performing program procedures in this guide. The *xxx* and *XXX*, which are printed in italic typeface, are used interchangeably to simulate variable system output.
< >	Input that does not appear on the screen when typed (such as passwords, tabs, or carriage returns) appears between angle brackets.
< **Ctrl** > **char**	Control characters do not appear on the screen when typed. To type a control character, hold down the control key while you type the character specified by **char**. For example, the notation < **Ctrl** > **d** means to hold down the control key while pressing the **d** key; the letter **d** does not appear on the screen.
[ ]	Command arguments that are optional, such as [**-msCj**], are enclosed in square brackets.

	The vertical bar separates optional arguments from which you may choose one. For example, when a command line has the following format: ***command*** **[*arg1*	*arg2*]** You may use either ***arg1*** or ***arg2*** when you issue the ***command.***
...	All ellipsis placed after an argument means that more than one argument may be used on a single command line.

command(number)

A command name followed by a subclass number in parentheses (**ed**(1), for example) identifies the reference manual page where the command is described. In this release, manual pages are arranged by subclass numbers in three reference manuals as follows:

User's Reference Manual - 1, 1B, 1C, and 1G
Administrator's Reference Manual - 1M, 7, and 8
Programmer's Reference Manual - 1, 1G, 2, 3, 3C, 3F, 3S, 3M, 3X, 3N, 3W, 4, and 5

prompts	The system default prompt is the dollar sign (`$`). The default for a superuser is the pound sign (`#`). The default for a C-shell is the percent sign (`%`).
commands	When the full pathname of a command is shown in an example (such as **/etc/fsck**), the command must be entered that way.

Related Product Information

- Hardware Installation Guide
- Software Installation Guide

Contents

About This Document iii

Section 1 Start-Up Diagnostics

Overview 1-1
SUS Characteristics 1-2
Start-Up Sequence 1-5
Cold Start 1-5
Warm Start 1-6
Hot Start 1-7
Diagnostic Hardware Names 1-12
Activating Start-Up Diagnostics 1-14
Automatic Start-Up 1-15
Manual (Interactive) Start-Up 1-18
Manual Start-Up Functions 1-20
Query 1-20
Clear Functions 1-27
Clear Warm String 1-30
Clear Memory 1-32
Specify Default Load Device 1-32
Set TOD Wake-Up Alarm 1-34
Install System 1-38
Load (File) 1-39
Switch Input Terminals 1-40
Test Menu Selections 1-41
Loadable Tests 1-58
SUSBUG 1-61

SET (Set Access Length) 1-63
OUTX (Re-Direct Console Output) 1-63
Start-Up Diagnostics 1-64
Activating Start-Up Diagnostics 1-64
Automatic Start-Up Diagnostics 1-64
Manual (Interactive) Start-Up 1-68
Start-Up Test Descriptions 1-69
General Microprocessor Test 1-69
PMC Status Indicator (LED) Test 1-70
PMC (Processor Memory Controller) Tests 1-73
IVT (Interval Timer Tests) 1-73
TOD (Time-Of-Day Clock Tests) 1-74
EDC (Error Detect and Correct Tests) 1-74
MMU (Memory Management Unit Tests) 1-75
MEM (Memory Array Module/ PMC Cache Memory Tests) 1-76
FPP (Floating-Point Processor) 1-77
PT0C/PT0D (PMC Port C and Port D Tests) 1-78
HPSIO (High Performance 8-Channel I/O Controller) and DHPSIO (Dual High Performance 16-Channel I/O Controller) . . 1-79
HPMSC/SMSC SCSI Controller Tests 1-80
SYT (MUX-5000 I/O Communication Controller Tests) 1-81
DMSC (Mass Storage Controller Disk Tests) . . . 1-81
SCS (SCSI Disk/Tape Subsystem Tests) 1-82
STP (Streaming Tape Tests) 1-83
MPA (6-2-1 Sync/Async Controller) 1-83
Reporting Start-Up Errors 1-85
Front Panel Indicators 1-86
PMC Module Status Indicators (LEDs) 1-91
System Error Log (Memory) 1-92
Error Record Fields 1-94
Start-Up Diagnostic Error Reports 1-102
Error Codes 1-104

Section 2 In-Service Diagnostics

Overview 2-1
Definition of In-Service Diagnostics 2-1
How to Perform In-Service Diagnostics 2-2
Using the Diagnostics Menu 2-3
Selecting Device Tests 2-6
Sample Device Tests Screen 2-7
Procedure for Selecting Device Tests 2-8
Selecting System Tests 2-16
Reporting Tests Results 2-19
Test Report Screen (Native Tests) 2-20
Test Results (Comm, TTY, Printer, and Modem Tests) 2-30
Error Message Area 2-33
Selecting Tallies 2-34
Displaying Communication Tallies 2-36
Clearing Communication Tallies 2-37
Setting Communication Tally Thresholds 2-37
Selecting Data Capture 2-38
Data Capture (Native Devices) 2-39
Data Capture (Communication Links/Devices) 2-43
Selecting Error Log 2-48
Error Log Parameters 2-50
Performing Modem Equalization Tests 2-53
Test Descriptions 2-53
Non-SCSI Flexible Disk Tests 2-53
SCSI Flexible Disk Tests 2-55
Non-SCSI Disk Tests 2-57
SCSI Disk Tests 2-59
Non-SCSI Tape Tests 2-61
SCSI Tape Tests 2-63
Parallel Printer Tests 2-66
tty and Communication Device Tests 2-67

Section 3 Error Codes

In-Service Diagnostic Error Codes 3-1
Overview 3-1
Error Code Format (WXYZ) 3-2
0XYZ Error Codes 3-3
1XYZ Error Codes 3-7
2XYZ Error Codes 3-11
3XYZ Error Codes 3-11
4XYZ Error Codes 3-15
5XYZ Error Codes 3-19
6XYZ Error Codes 3-24
7XYZ Error Codes 3-29
8XYZ Error Codes 3-29
9XYZ Error Codes 3-33
AXYZ Error Codes 3-33
BXYZ Error Codes 3-41
C0YZ (SCSI High Performance Mass Storage Controller/SCSI Mass Storage Controller/SCSI Host Adapter) Error Codes 3-48
MPCC Communication Driver (MPDV) Error Codes 3-49
BMXX Device Error Codes 3-49
BTXX Device Error Codes 3-52
MPXX Device Error Codes 3-56
Start-Up Error Codes 3-60
Overview 3-60
Start-Up Diagnostic Error Reports 3-60
00XX (SSIN) Error Codes 3-61
01XX (SSKE) Error Codes 3-70
02XX (ISL) Error Codes 3-71
04XX (TTY0) Error Codes 3-80
05XX (SSLS) Error Codes 3-80
06XX (SSST) Error Codes 3-82
0DXX (CMS0) Error Codes 3-86
0EXX (SYT0) Error Codes 3-88

1XXX (EDC0) Error Codes 3-99
2XXX (TOD0) Error Codes 3-103
3XXX (IVT0) Error Codes 3-105
4XXX (MEM0) Error Codes 3-106
5XXX (MMU0) Error Codes 3-115
7XXX (DK50) Error Codes 3-118
8XXX 3-124
9XXX (MPA0) Error Codes 3-125
AXXX (STP0) Error Codes 3-128
BXXX (CPC0) Error Codes 3-130
COXX (HIO0) Error Codes 3-130
DXYZ (SCS0) Error Codes 3-141
EXYZ (FPP) Error Codes 3-148

Figures

1-1.	Start-Up Sequence	1-8
1-2.	U 5000/30 and U 5000/35 SUS Component Identification	1-17
1-3.	U 5000/50 and U 5000/55 SUS Component Identification	1-18
1-4.	Select Start-Up Function Menu	1-20
1-5.	Examine ROM Number Menu Sequence	1-22
1-6.	Examine Error Log Menu Sequence	1-24
1-7.	Clear System Status Menu Sequence	1-29
1-8.	Clear Warm String Menu Sequence	1-31
1-9.	Specify Default Load Device	1-33
1-10.	Install System Menu Sequence	1-39
1-11.	Load File Menu Sequence	1-40
1-12.	Switch Input Menu Sequence	1-42
1-13.	Selecting the Test Function	1-43
1-14.	Test Loop Menu Sequence	1-44
1-15.	Flex Drive Scope Loop Menu Sequence	1-47
1-16.	Selecting the Flex Write/Verify Function	1-51
1-17.	SUS Message (Example)	1-66
1-18.	U 5000/30 and U 5000/35 Unit Front Panel Indicators	1-87
1-19.	U 5000/50 and U 5000/55 Unit Front Panel Indicators	1-88
1-20.	Error Record Files	1-93
1-21.	Hardware Failure Error Report (Manual Test)	1-103
1-22.	Operator Failure Error Report	1-103
1-23.	Automatic Start-Up CRITICAL Error (Example)	1-104

2-1. Diagnostics Tasks 2-2
2-2. maint Login Display 2-3
2-3. Diagnostics Functions Menu 2-4
2-4. Device Tests Screen (Example) 2-8
2-5. System Test Display 2-18
2-6. Test Report Screen for Native Tests (Example) 2-21
2-7. Basic Error Analysis Report for a Fixed Disk Error (Example) 2-28
2-8. Possible Cause Information for a Fixed Disk Error (Example) 2-29
2-9. Hex Translation Error Report for a Fixed Disk Error (Example) 2-30
2-10. Screen with Comm, tyy, Printer, or Modem Test Results Display 2-31
2-11. Tallies (Communication) Menu Selections 2-35
2-12. Error Log Report Screen 2-50
2-13. Turnaround Test Connectors 2-69

3-1. In-Service Diagnostic Test Reports 3-2
3-2. Line Interface Module (LIM) Status Codes 3-58
3-3. 5.25-Inch Disk Completion Codes 3-78
3-4. MEM Error Code 2 Bits (for .5 or 1 Megabyte Memory Boards) 3-108
3-5. MEM Error Code 2 Bits (for 2 or 4 Megabyte Memory Boards) 3-109
3-6. DK50 Error Code 2 Bits 3-123
3-7. DK50 Status Field Codes 3-124
3-8. MPA Observed Data Field Bits 3-127

Tables

1-1.	ROM Locations	1-1
1-2.	SUS/OS Context Memory Configuration	1-11
1-3.	Hardware Names	1-13
1-4.	Tape Drive Status Bytes	1-54
1-5.	PMC Status Indicators	1-71
2-1.	Configured Devices Listing	2-9
2-2.	Valid Group Identifiers	2-10
2-3.	Test Names/Test Groups	2-12
2-4.	System Tests Performed	2-17
2-5.	Data Capture (Native) Functions	2-39
2-6.	Data Capture (Communication) Functions	2-43
3-1.	SCSI Disk Error Codes (YZ Values)	3-38
3-2.	SCSI Tape Error Codes (YZ Values)	3-46
3-3.	ISL, TISL, SSLS Error Code 2 Values	3-77
3-4.	5.25-Inch Disk Completion Codes	3-78
3-5.	5.25-Inch Disk Device Status Codes	3-79
3-6.	5.25-Inch Disk Status Bits	3-79
3-7.	5.25-Inch Disk Error Bits	3-79
3-8.	Mass Storage Controller (MSC) SSST Error Code 2 Values	3-85
3-9.	RAM Chip Locations (Single Bit Errors)	3-110
3-10.	XXX Values for DK50 Error Code 1 Field	3-122
3-11.	SCSI Self-Test Error Code 2 Values	3-142
3-12.	SCS0 Error Code 2 Field	3-145
3-13.	SCS0 Error Code 2 Field	3-146
3-14.	Y Values	3-150
3-15.	Z Values	3-150

Section 1
Start-Up Diagnostics

Overview 1-1
SUS Characteristics 1-2
Start-Up Sequence 1-5
Cold Start 1-5
Warm Start 1-6
Hot Start 1-7
Diagnostic Hardware Names 1-12
Activating Start-Up Diagnostics 1-14
Automatic Start-Up 1-15
Manual (Interactive) Start-Up 1-18
Manual Start-Up Functions 1-20
Query 1-20
Clear Functions 1-27
Clear Warm String 1-30
Clear Memory 1-32
Specify Default Load Device 1-32
Set TOD Wake-Up Alarm 1-34
Install System 1-38
Load (File) 1-39
Switch Input Terminals 1-40
Test Menu Selections 1-41
Loadable Tests 1-58
SUSBUG 1-61
SET (Set Access Length) 1-63
OUTX (Re-Direct Console Output) 1-63
Start-Up Diagnostics 1-64
Activating Start-Up Diagnostics 1-64
Automatic Start-Up Diagnostics 1-64
Manual (Interactive) Start-Up 1-68

Start-Up Test Descriptions 1-69
General Microprocessor Test. 1-69
PMC Status Indicator (LED) Test 1-70
PMC (Processor Memory Controller) Tests 1-73
IVT (Interval Timer Tests) 1-73
TOD (Time-Of-Day Clock Tests). 1-74
EDC (Error Detect and Correct Tests) 1-74
MMU (Memory Management Unit Tests). 1-75
MEM (Memory Array Module/ PMC Cache Memory Tests) 1-76
FPP (Floating-Point Processor) 1-77
PT0C/PT0D (PMC Port C and Port D Tests) 1-78
HPSIO (High Performance 8-Channel I/O Controller) and DHPSIO (Dual High Performance 16-Channel I/O Controller) . . 1-79
HPMSC/SMSC SCSI Controller Tests. 1-80
SYT (MUX-5000 I/O Communication Controller Tests) 1-81
DMSC (Mass Storage Controller Disk Tests) . . . 1-81
SCS (SCSI Disk/Tape Subsystem Tests) 1-82
STP (Streaming Tape Tests) 1-83
MPA (6-2-1 Sync/Async Controller) 1-83
Reporting Start-Up Errors 1-85
Front Panel Indicators 1-86
PMC Module Status Indicators (LEDs) 1-91
System Error Log (Memory) 1-92
Error Record Fields 1-94
Start-Up Diagnostic Error Reports 1-102
Error Codes. 1-104

Section 1
Start-Up Diagnostics

Overview

The Start-Up Subsystem (SUS) is a Read Only Memory (ROM) resident firmware program. This program controls the events that occur when power is applied to the systems or when the reset switch is activated.

The SUS firmware program is stored in four ROM (or EPROM) devices that are installed on the Processor Memory Controller (PMC) module. On that module, specific ROMs contain the odd addresses of the program, and other specific ROMs contain the even addresses of the program. Table 1-1 shows the location of the four ROM devices.

Table 1-1. ROM Locations

	PMC III	
	U 5000/30	U 5000/50
1 odd	4K	1S
1 even	4L	2S
2 odd	4H	1T
2 even	4J	2T
	PMC IV	
	U 5000/35	U 5000/55
1 odd	1FF	8TT
1 even	2FF	5TT
2 odd	6DD	9TT
2 even	5LL	6TT

An odd address is the least significant or low order byte of a word. An even address is the most significant or high order byte of a word. Each ROM stores 32 kilobytes by 8 bits of data; therefore, the program occupies 128 kilobytes of processor address space. This space is accessed through the hexadecimal PMC addresses 5C00000-5C1FFFF.

The ROMs operate with a Motorola® 68020 microprocessor using an MMU segment register format and an MMU page map register that contains 4,000 hexadecimal entries.

Note: *The information described in this section, "Start-Up Diagnostics," refers to Release 5.x only. The rest of this book details information in addition to Release 5.x. If you need information relative to the U 5000/30 and U 5000/50 for start-up diagnostics, please refer to previously released documentation.*

This section describes the SUS characteristics, the start-up function, and the functional sequence of events that the SUS firmware program performs. These descriptions apply to the currently available SUS version which is identified as Release 5.x (Release 5, version 0 or greater) for the U 5000 Series Operating System.

SUS Characteristics

The SUS ROM performs the following major functions:

- Initializes basic hardware modules.
- Performs automatic or manual (interactive) software load operations from 5.25-inch fixed disk media, 5.25-inch flexible disk media, 5.25-inch streaming tape cartridges, or from an external 8-inch fixed disk located in an expansion cabinet.

- Communicates with RS-232-C-compatible TTY terminals. One of these terminals operates at 9600 baud and one may be connected to an automatic answer modem at 300, 1200, or 2400 baud to permit the performance of remote diagnostics.

- Reports and logs errors.

- Performs automatic or manual (interactive) diagnostic tests to detect failures that prevent the loading of the operating system software or the performance of any required system function. Isolating faults to the module level is a secondary objective of the SUS.

- Provides interactive utility routines to:

  — Display error log records and system hardware configuration information
  — Clear memory contents and system status indicators
  — Manipulate the TOD alarm

An automatic start-up sequence cannot be performed until after the initial hardware and operating system software installation procedures are completed, because the automatic start-up sequence tries to load some files (or verify that the files are previously loaded). Manual (interactive) start-up sequences and diagnostics can be performed with or without the presence of operating system software.

The ROM SUS operates with and performs start-up diagnostic programs (level-0 diagnostics) to test the following hardware elements. In this list, the diagnostic program names are in parentheses.

- Processor Memory Controller Module (IVT, TOD, FPP, EDC, MMU)

- Memory Array Module and PMC Cache Memory (MEM)

- Mass Storage Controller (STP for 5.25-inch streaming tape tests)
- HPMSC/SMSC (SCSI Mass Storage Controller), SCSI Host Adapter
- High Performance Serial I/O Controller (HIO)
- Communications Controller (HIO and/or MPA)

MPA is a disk resident program that is loaded by the SUS ROM program; therefore, some errors associated with the MPA program may actually be caused by failure to correctly load the MPA program from disk.

SUS diagnostics are accessed through any RS-232-C compatible device that is connected to these communication channels with the following characteristics:

- PMC channel A (modem interface — for remote diagnostic operations) has the following characteristics and capabilities:
  - — Automatic answer
  - — Generates Data Set Ready (DSR)
  - — 300 or 1200 or 2400 baud rate
  - — Even parity
  - — One stop bit
  - — Seven bits per character (plus one more bit for parity)
- PMC channel B (for local diagnostic or system console operations) has the following characteristics and capabilities:
  - — 9600 baud rate
  - — Generates CTS (Clear to Send)
  - — Even parity
  - — One stop bit
  - — Seven bits per character (plus one more bit for parity)

The SUS operates with any memory quantity from 256 kilobytes to 16 megabytes (in 256-kilobyte increments).

Start-Up Sequence

The SUS performs one of three different automatic start-up sequences depending on the conditions that exist when the start-up sequence is activated. Although the individual SUS releases do not do exactly the same things in the same sequence, each SUS release is capable of performing one of three different automatic start-up sequences: cold start, warm start, or hot start. The following subsections describe the basic functions performed during the start sequences.

Cold Start

A cold start sequence occurs if a power-up (or reset) is activated when system memory does not contain a valid copy of the operating system software. The SUS identifies this condition and performs the cold start sequence if the logical memory addresses FAC400-FAC403 contain any ASCII characters other than WARM.

During a cold start sequence, the SUS performs the following functions:

- Tests and initializes the basic hardware modules of the system.
- Calculates the system memory size and creates a click map to identify the 2-kilobyte segments of reliable system memory.
- Verifies memory and clears it to zero.

- Initializes the SUS/OS Interface area of system memory. (Refer to Table 1-2 for information on SUS/OS memory contexts.)
- Tests the system load device.
- Finds and loads the operating system software Intermediate System Loader (ISL) file and then transfers control to the ISL. The ISL then loads the operating system and returns control to SUS.
- Loads the operating system kernel and transfers control to the operating system kernel.

Warm Start

A warm start sequence occurs if a power-up (or power-fail recovery) is activated when system memory contains a valid copy of the operating system software. The SUS identifies this condition and performs a warm start sequence if logical memory addresses FAC400-FAC403 contain the ASCII characters WARM.

During a warm start sequence, the SUS performs the following functions:

- Tests and initializes (non-destructive tests) the basic hardware modules of the system
- Verifies that the click map (good memory map) created during the last cold-start sequence is accurate
- Saves the contents of memory, verifies memory reliability, and then restores the saved memory contents to the original locations
- Determines the operating system entry point address (as loaded during the last cold start) and transfers control to that address

Hot Start

The hot start capabilities of the SUS are not used by all versions of the operating system software.

A hot start sequence occurs only if a power-fail recovery is activated when system memory contains a valid copy of the software (memory warm string contains WARM string) and when the Time of Day (TOD) clock time stamp indicates that the duration of the power failure was less than 21 seconds. If the software has not initialized both of these fields, the SUS performs a warm start.

During a hot start sequence, the SUS performs the following functions:

- Initializes the basic hardware modules of the system
- Verifies that the click map (good memory map) created during the last cold start sequence is still accurate
- Determines the operating system entry point address (as loaded by the operating system during the last cold start) and transfers control to that address

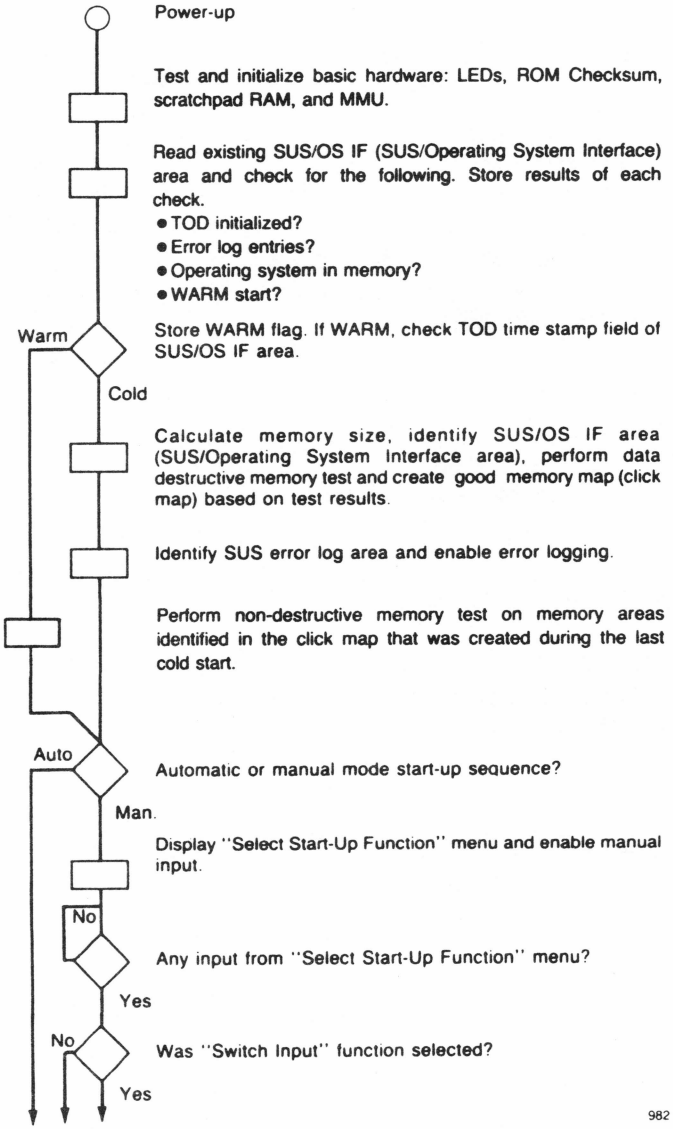

Figure 1-1. Start-Up Sequence

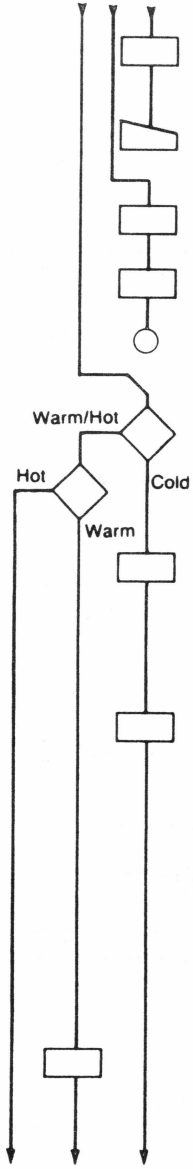

Refresh the display of the "Select Start-Up Function" menu on channel A, B, and O terminals and enable all three terminals for input.

Wait for input from channel A, B, or O terminal and when first inputis received, disable input from the other terminal.

If LOAD or INSTALL function was requested, clear local system memory.

Perform the selected LOAD, INSTALL, QUERY, TEST, or SUSBUG function.

Return to main menu, wait for input.

Cold, warm, or hot start sequence?

If TOD clock is initialized and if the operating system saved the time stamp in the SUS/OS IF area at power-down time.

Enable terminals to display Auto Test Sequence header and messages as tests are performed, and enable terminals for keyboard input.

Perform data destructive tests on the following system modules and devices. Magnetic media tests do not access data or program file areas.

- PMC Interval Timer chip (IVT)
- PMC Time Of Day chip (TOD)
- PMC Error Detection and Correction circuitry (EDC)
- PMC Memory Management Unit circuitry (MMU)
- Local System Memory and PMC Cache Memory (MEM)
- Communication Controller (HIO), or High Performance 8-Channel I/O Controller (HIO)
- 5.25 Inch Disk Controller (DK5)
- 8 Inch Storage Module Drive Controller (SMD)
- 8 Inch SCSI (SCS) Adapter
- Streaming Tape Controller (STP)
- Communication Controller or Multi-Protocol Communication Controller (MPA)

Perform warm start non-destructive module tests. Same as cold start tests except:

- Memory contents are restored when memory test is complete
- System modules whose test code is disk resident are not tested because loading this code in memory destroys the "warm" memory contents.

983

Figure 1-1. Start-Up Sequence (cont.)

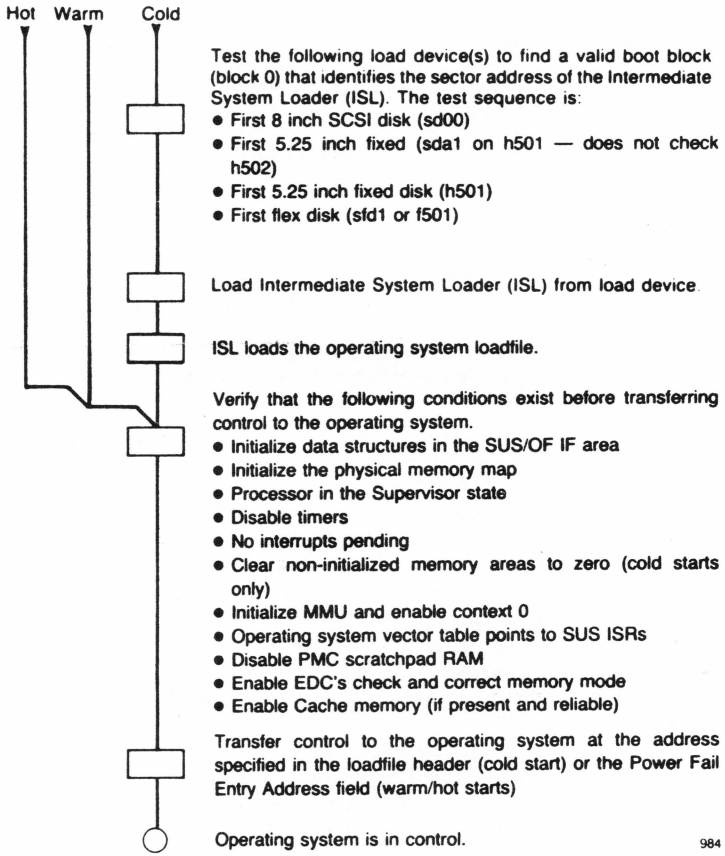

Figure 1-1. Start-Up Sequence (cont.)

Table 1-2. SUS/OS Context Memory Configuration

	SUS CONTEXT	OS CONTEXT
0000 0FFF	Local System Memory	Operating System Memory
1000 1FFF	Invalid (marked) Addresses	
2000 2FFF	Diagnostic Load Area	
3000 37FF	SUS Disk Buffer Area	
3800 F01FFF	Operating System Load Area*	
F02000 F07FFF	Invalid (marked) Addresses*	
F08000 FABFFF	SUS Memory Mapping Window*	
FAC000 FACFF	SUS/OS Interface (I/F) Area Fields (All values shown in hexadecimal) • WARM String FAC400 (4) • Power Fail Entry Addr. FAC404 (4) • Reserved FAC408 (2) • TOD Initialized Flag FAC40A (2) • OS Click Map FAC40C (20) • Load Device Name FAC46C (4) • Console Device Name FAC470 (4) • Power Fail Time Stamp FAC474 (6) • Reserved FAC47A (4) • Reserved FAC47E (4) • pt0a Baud Rate FAC482 (2) • Boot Load File Name FAC484 (1A) • Cache Flag FAC49E (2) • Reserved FAC4A0 (C) • Utility Parameters FAC4AC (54) • SUS Work Area FAC500 (188) • SUS Errorlog Area FAC688 (978)	Same As SUS Context
FAD000 FAFFFF	Invalid (marked) Addresses	
FB0000 FEFFFF	Multibus Memory	
FF0000 FFFFFF	Multibus I/O Area	

* In Release 5.x, the load area expands to FABFFF.

Diagnostic Hardware Names

The U 5000 SUS diagnostics use a four-character name to identify each system hardware element that is tested. The diagnostics use the following types of names:

- Peripheral device names
- Communication device (station or link) names
- I/O controller names
- Memory Array board names
- Small Computer System Interface (SCSI) disk/tape subsystem names
- PMC terminal names

Table 1-3 shows the SUS diagnostic hardware names assigned to currently available hardware elements (boards/links/devices).

Table 1-3. Hardware Names

BOARD/DEVICE DESCRIPTION	DIAGNOSTIC NAMES
Processor Memory Controller (PMC) Board	pmcb
PMC channel a device	pt0a
PMC channel b device	pt0b
Memory Array Boards	
First board	mem0
Second board	mem1
Third board	mem2
Fourth board	mem3
Mass Storage Controller	
Disk functions	h500/f500
Floppy devices	f501-f502
Winchester devices	h501-h502
Tape functions	st00
Streaming tape device st01	
Small Computer System Interface (SCSI)	
External devices	sh00
Disk devices	sd01-sd34
Tape devices	ss41-ss63
Internal devices	sh10
Disk devices	sda1-sdb1
Tape devices	
45 mb	ssf1
150 mb	ssg1
Floppy devices	sfd1-sfe3
6-2-1 Sync/Async Communications	mp20
Communication Channeling Controller	
Bisync Tributary link (2780/3780)	bt00-bt01
Bisync Multipoint link (3270)	bm00-bm01
Asynchronous TTY Channels	
Serial TTY devices	tt00-tt05
Parallel Printer	pp00

Table 1-3. Hardware Names (cont.)

BOARD/DEVICE DESCRIPTION	DIAGNOSTIC NAMES
High Performance 8-Channel I/O Controller (HPSIO)	
First board	sb00
Serial devices	tt00-tt07
Parallel devices	pp00
Second board	sb10
Serial devices	tt08-tt15
Parallel devices	pp01
Third board	sb20
Serial devices	tt16-tt23
Parallel devices	pp02
Fourth board	sb30
Serial devices	tt24-tt31
Parallel devices	pp03
Dual High Performance 16-Channel I/O Controller (HPSIO-16)	
First board	sb00/sb10
Serial devices	tt00-tt15
Parallel devices	pp01-pp02
Second board	sb20/sb30
Serial devices	tt16-tt31
Parallel devices	pp03-pp04
Third board	sb50/sb60
MUX-5000 I/O Controller	
First board	s000 (sy00)
Clusters	s010-s0g0
Cluster ports	s011-s0gg
Second board	s100 (sy10)
Clusters	s110-s1g0
Cluster ports	s111-s1gg

Activating Start-Up Diagnostics

The start-up diagnostics operate in either one of two modes: automatic or manual (interactive).

Automatic Start-Up

The automatic start-up mode initializes and tests the basic hardware modules (including the load device), loads the software in memory, and transfers control to that software with no operator action after the SUS is activated. Of course the SUS cannot perform a completely automatic start-up operation and load the software until all of the hardware and software installation procedures are performed at least one time.

The SUS uses the following methods to identify errors that occur during automatic start-up sequences:

- Set an error configuration in the PMC module status indicators LEDs (not all errors are reported to the LEDs).
- Record the error in the system error log (an area of reserved system memory).
- Display the error on the terminal(s) connected to the following ports:
  - PMC channel A (pt0a)
  - PMC channel B (pt0b)
  - 8-channel I/O controller (HIO) channel or 16-channel I/O controller

For more information about start-up errors, refer to the "Start-Up Error Codes" subsection of the "Error Codes" section.

The following types of errors may occur during an automatic start-up sequence.

Degraded Error

Degraded errors decrease the performance capabilities of the system, but do not prevent the system from performing a required function. When a system degraded error occurs, the SUS displays a summary of the system error log record and continues the start-up sequence.

Critical Error

Critical errors prevent the system from performing a required function. If a system critical error occurs during start-up, the start-up sequence cannot continue.

When a system critical error occurs during start-up, the SUS records the error in the system error log (if the start-up sequence has advanced to the point of establishing the log), displays a short version of the error log record, displays the `Switching To Interactive Menu` message, and waits for the < **spacebar** > to be pressed. Pressing the < **spacebar** > advances the SUS to the **SELECT START UP FUNCTION** menu.

Use the following procedure to activate the automatic start-up mode:

1. Put the AUTO LOAD/MANUAL switch (switch S2 on the PMC module) in the AUTO LOAD position. Figures 1-2 and 1-3 illustrate the locations of these switches.

Note: *The normal position of switch S2 is in the AUTO LOAD position. The top cabinet panel must be removed to check or change the position of switch S2.*

2. Move the POWER switch to the ON position, or move the RESET switch (switch S1 on the PMC module) to the rear of the machine and then release it.

During the automatic start-up sequence, the SUS displays a series of messages that identify the activities that the start-up sequence is performing.

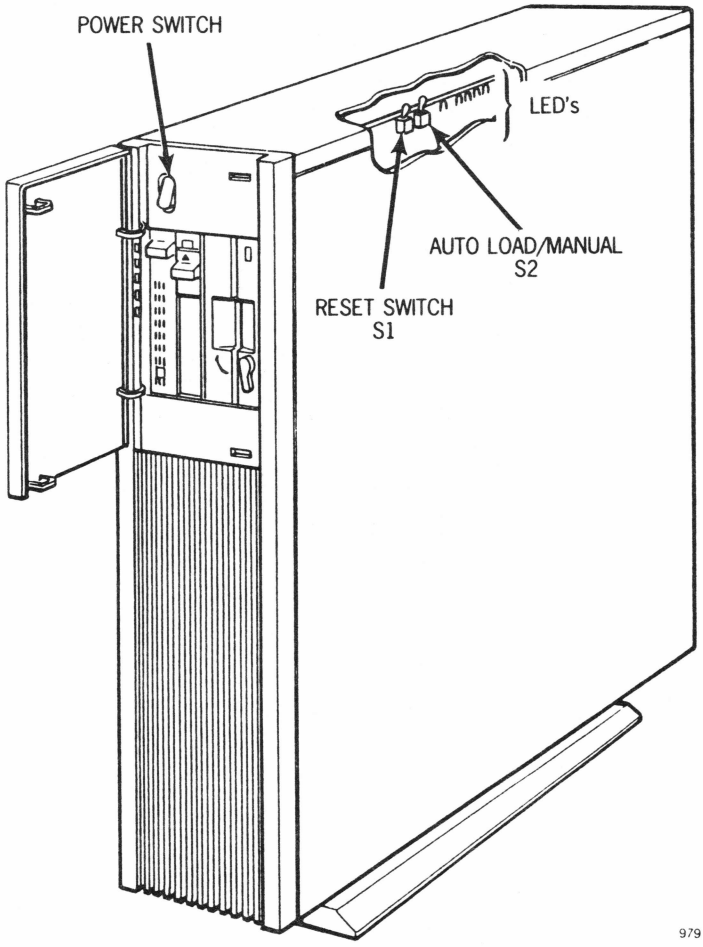

Figure 1-2. U 5000/30 and U 5000/35 SUS Component Identification

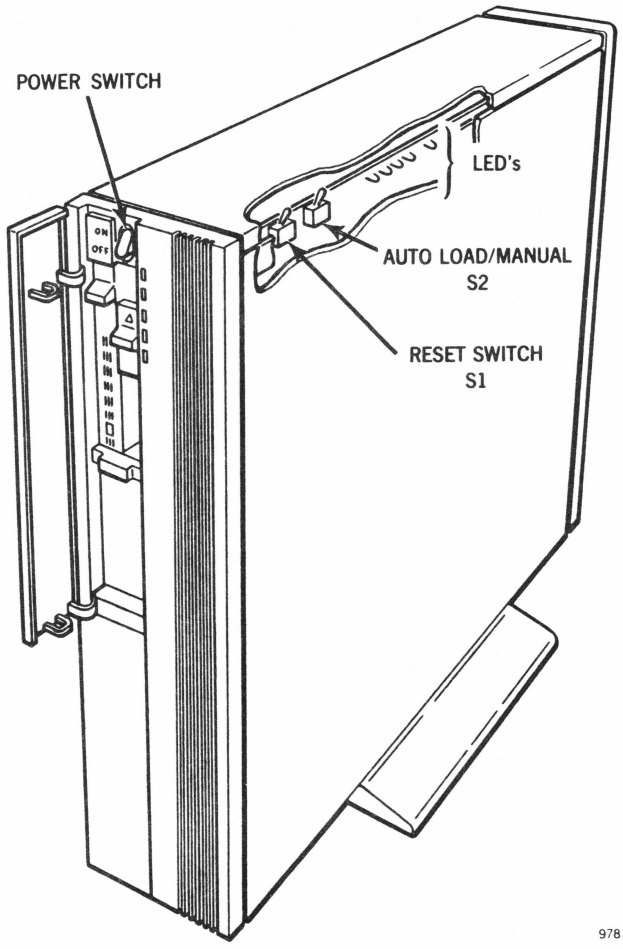

Figure 1-3. U 5000/50 and U 5000/55 SUS Component Identification

Manual (Interactive) Start-Up

The manual (interactive) start-up mode performs some basic hardware module initialization and verification, but does not perform

the basic hardware module tests as described in the "Automatic Start-Up" subsection of this section.

The manual start-up mode permits the individual selection of the following start-up functions:

- Query (inquiry)
- Install System
- Load File
- Switch Input Terminals
- Test
- Susbug

The SUS controls the selection and use of these start-up functions through a series of selection displays that are referred to as menus.

Use the following procedure to activate the manual (interactive) start-up mode:

1. Put the AUTO LOAD/MANUAL switch (switch S2 on the PMC module) in the MANUAL position (toward the front of the machine).

2. Move the POWER switch to the ON position, or move the RESET switch (switch S1 on the PMC module) toward the back of the machine and then release it. The manual mode selection is complete when the SUS displays the **SELECT START UP FUNCTION** menu.

3. To perform any of the manual mode functions, enter the item number that is associated with the desired function, and when the next menu is displayed, select an item number from that menu, and so on until the function is complete.

Manual Start-Up Functions

The following sections describe the functions that may be performed in the manual start-up mode. Figure 1-4 shows the **SELECT START UP FUNCTION** menu that permits the selection of these functions.

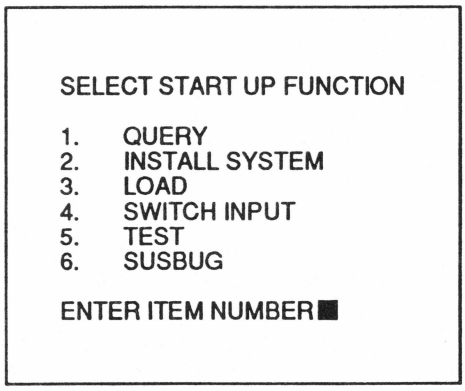

Figure 1-4. Select Start-up Function Menu

Note: *The clearing and/or checking message may occur the first time the QUERY, INSTALL, or LOAD functions are selected from the **SELECT START UP FUNCTION** menu.*

Query

The QUERY function permits access to the information that describes the status of the system. The available QUERY functions are:

- Examine ROM Number
- Examine Error Log
- Examine System Configuration
- Clear Functions

- Specify Default Load Device
- Set TOD Wake-up Alarm

From the **SELECT START UP FUNCTION** menu shown in Figure 1-4, select the QUERY function by entering **1**. After selecting the QUERY function, additional menus show the operations that may be performed and the options that are available within each of the following QUERY subfunctions. Figures 1-5 through 1-17 show the menu sequences that are associated with the different QUERY subfunctions. The following subsections describe each of the QUERY subfunctions.

Examine ROM Number

The **EXAMINE ROM NUMBER** routine identifies the release and version numbers of the SUS firmware program in the ROM/EPROM devices that are installed on the PMC module. The routine displays the release and version number information in the following format:

```
ROM NUMBER = RVrv
```

The two left-most characters identify the release (R) and version (V) numbers of the program in the even address socket. The two right-most characters identify the release (r) and version (v) numbers of the program in the odd address socket.

Figure 1-5 shows the menu sequence that is used to perform the **EXAMINE ROM NUMBER** routine.

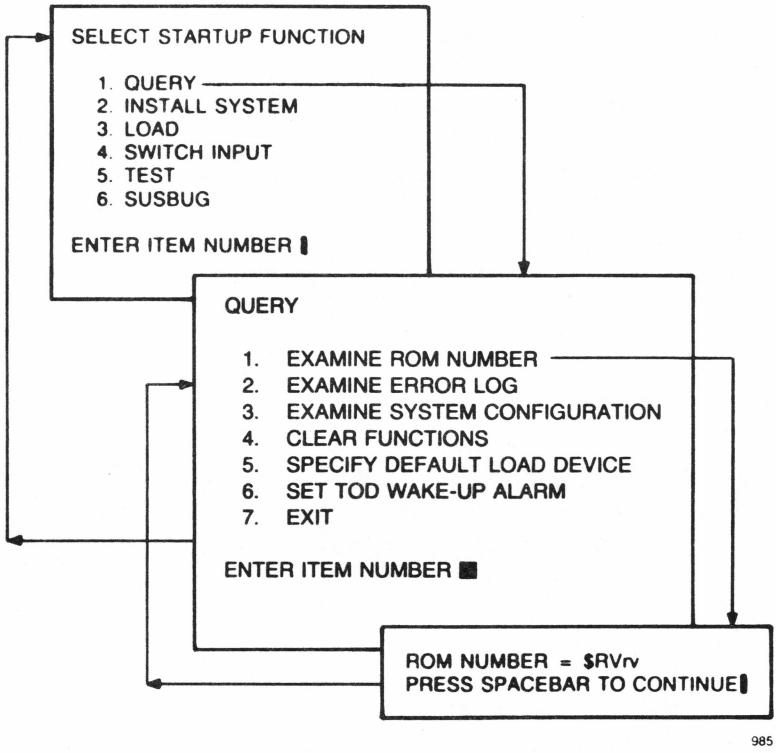

Figure 1-5. Examine ROM Number Menu Sequence

Examine Error Log

The **EXAMINE ERROR LOG** routine permits the display of information in the system error log. This routine provides selections to display all of the records in the error log or to display only specific types of error records.

After you select the desired option from the **EXAMINE ERROR LOG** menu, the routine displays one complete error record of the type selected. The most recent error displays first. Press the

< **spacebar** > to display the next most recent error of the same type, or press any other key to terminate the sequence. Repeat this sequence (or terminate the sequence) until the SUS displays the last error of the selected type.

Figure 1-6 shows the menu sequence that is used to perform the **EXAMINE ERROR LOG** routine.

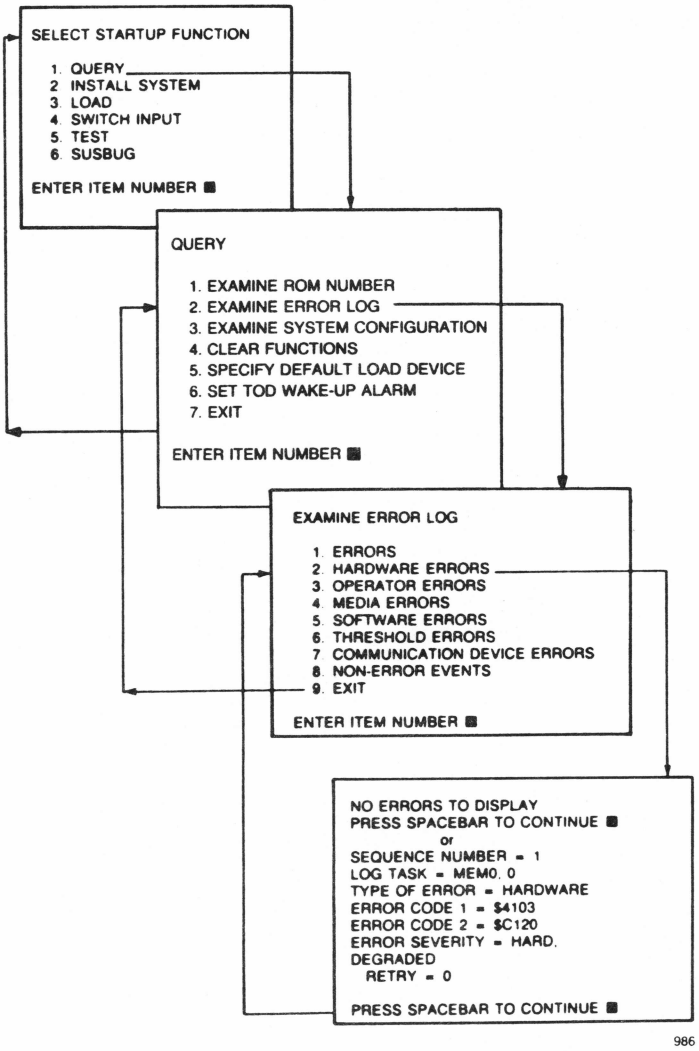

Figure 1-6. Examine Error Log Menu Sequence

Examine System Configuration

The **EXAMINE SYSTEM CONFIGURATION** routine generates a display sequence that provides information about the system hardware.

The menu provides:

- A list of the responding Multibus boards and the base address of each board
- A list of the memory clicks (2-kilobyte segments of reliable memory)
- The total number of bytes of system memory that is available to the operating system
- A list of responding Multi-Protocol Communication Controller (MPA) or communication controller boards and the available Line Interface Modules (LIM) connected to each of those boards
- Identification of the PMC module (PMC III or PMC IV) and shows the condition of the PMD diagnostic I/O port status bits

The **EXAMINE SYSTEM CONFIGURATION** routine uses the following sequence to display this information. The PMC CONDITION display occurs only when the **EXAMINE SYSTEM CONFIGURATION** is selected from the **QUERY** menu.

The following display appears if PMC-IV is applicable to your system. The Multibus display follows the PMC information. The information on the Multibus display may vary with individual systems.

```
PMC CONDITION:
PMC III (or IV):

—— FPP PRESENT                    or NOT PRESENT
—— MANUAL MODE                    or AUTO MODE
—— MANUAL (OR BBU) OK             or BATTERY (OR BBU)
                                     FAULT
—— CACHE PRESENT                  or NOT PRESENT
—— CMOS MEMORY (PMC IV only)
   PRESENT                        or NOT PRESENT

PRESS SPACEBAR TO CONTINUE

MULTI-BUS BOARDS PRESENT:

NAME                              ADDRESS

st00                              $ FF0210
h500                              $ FF0200
mp00                              $ FF1420
sb00                              $ FF1400

    PRESS SPACEBAR TO CONTINUE
```

Remember that as in most SUS displays, the dollar sign ($) indicates that the information is a hexadecimal value. The values shown in the previous display and in the remaining **EXAMINE SYSTEM CONFIGURATION** displays are only examples; the actual data displayed depends on the system hardware configuration. To advance to the third **EXAMINE SYSTEM CONFIGURATION** display, press the **< spacebar >**.

Note: *The following example indicates that the SUS received a response from the MPA or communication controller, and that two LIMs successfully completed the MPA level-0 diagnostics.*

```
MPA      LIMS AVAILABLE:

MPA      LIM 1    LIM 2    LIM 3    LIM 4
mpxx     YES      YES      NO       NO

PRESS SPACEBAR TO CONTINUE

AVAILABLE MEM SIZE = $9FE800

GOOD CLICKS:

$0000
$0001
$0002-$0FFF
$4000-$43FC
$43FD
#43FE
$43FF

PRESS SPACEBAR TO CONTINUE
```

Note: *The click display identifies the current memory click map. These clicks are tested only if the MEM level-0 diagnostic has been performed since the last BBU OFF condition. The last three clicks in the previous list are not available to the operating system because they are reserved for SUS and are not included in the* `AVAILABLE MEM SIZE` *value.*

Clear Functions

The **CLEAR FUNCTIONS** subfunction clears all memory resident information that is related to error events and resets the FAULT indicator LED on the front panel of the main unit. The following list identifies the items that this routine clears:

- Clear system status
- Clear warm string

- Clear memory
- Exit

Clear System Status

The **CLEAR SYSTEM STATUS** routine clears all memory resident error information and resets the FAULT indicator (LED) on the main unit control panel. The following list identifies the items that this routine clears:

- System error log
- System status byte
- PMC status indicator LEDs
- FAULT and COMMUNICATIONS LEDs

Figure 1-7 shows the clear system status menu sequence.

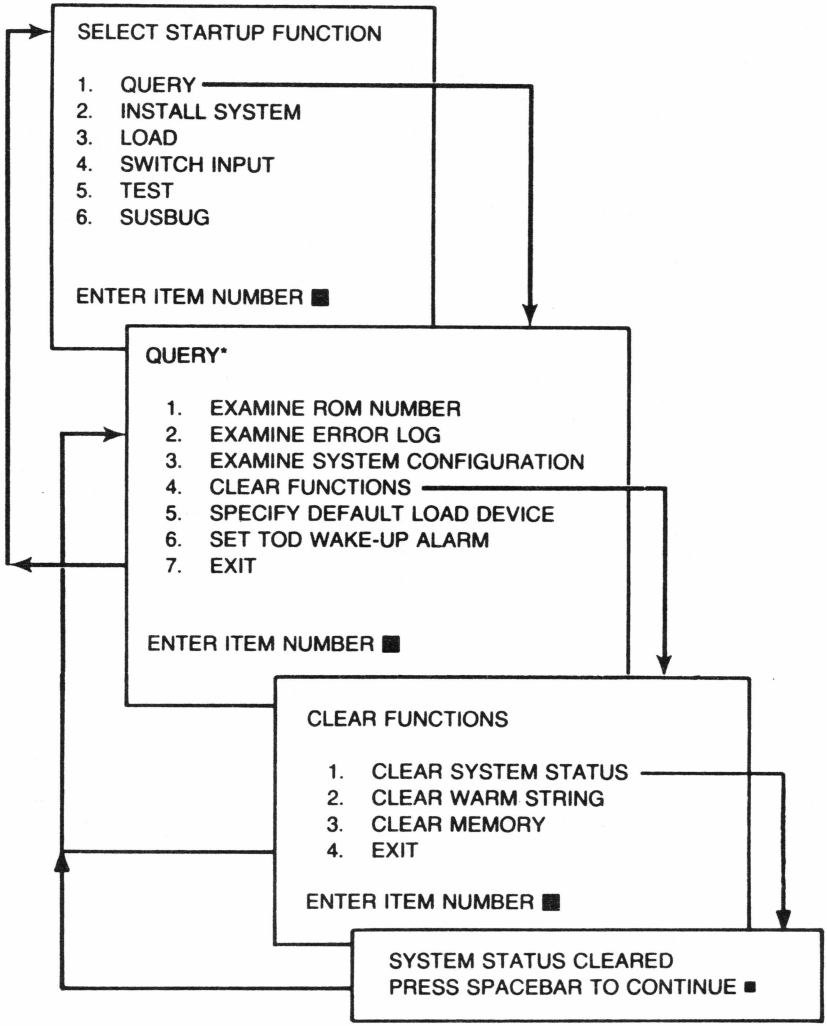

*Release 5.X version of the QUERY menu.

987

Figure 1-7. Clear System Status Menu Sequence

Clear Warm String

The clear warm string routine resets the ASCII string WARM stored in the Start-Up Subsystem/Operating System (SUS/OS) Interface Area. Performing this routine causes the next reset operation (or power-up sequence) to generate a cold start sequence instead of a warm start (or power fail recovery) sequence. This is a useful method of generating a new load operation.

Figure 1-8 shows the menu sequence that is used to perform the function of clearing the warm string function.

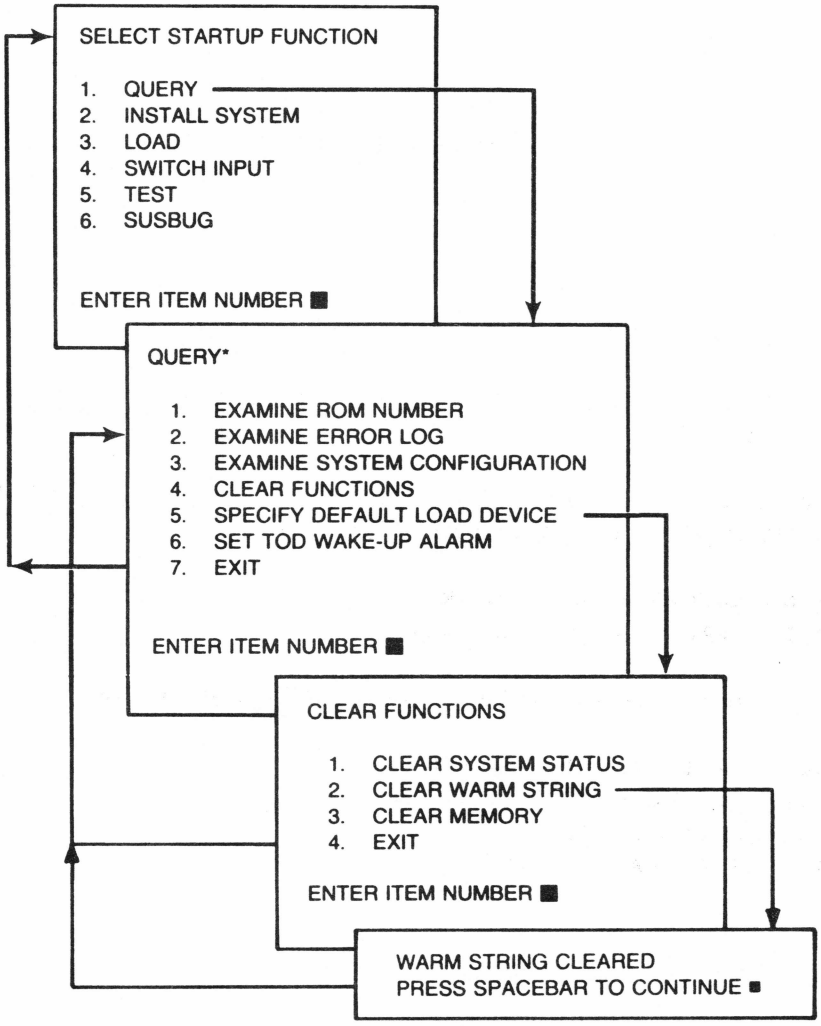

*Release 5.X version of the QUERY menu.

988

Figure 1-8. Clear Warm String Menu Sequence

Clear Memory

The CLEAR MEMORY routine clears either local system memory (except the SUS/OS Interface Area, the SUS diagnostic load area, and the SUS disk buffer area).

The clear local system memory routine may be performed on PMC III or PMC IV systems that have the special CMOS battery-backed RAM submodule.

When CLEAR MEMORY is selected, SUS displays the following input request:

```
ENTER NAME OF MEMORY TO CLEAR (SYSTEM/CMOS)
```

To clear local system memory, enter **system** (upper or lowercase is accepted).

If any name other than **system** is entered, SUS displays the following message and does not clear either memory:

```
WRONG MEMORY NAME ENTERED
PRESS SPACEBAR TO CONTINUE
```

If **system** is entered, SUS displays the following message:

```
CLEARING LOCAL SYSTEM MEMORY ...
LOCAL SYSTEM MEMORY CLEARED
WARM STRING CLEARED
PRESS SPACEBAR TO CONTINUE
```

Specify Default Load Device

The SPECIFY FAULT LOAD DEVICE selection shown in Figure 1-9 permits you to specify the name of the device that SUS selects for automatic load operations.

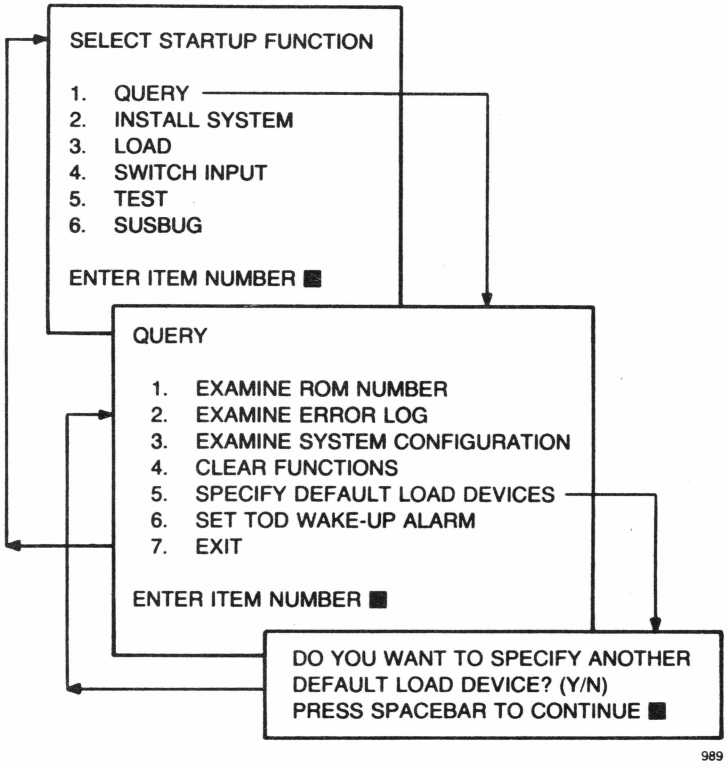

Figure 1-9. Specify Default Load Device

When `SPECIFY LOAD DEVICE` is selected from the SUS **QUERY** menu, SUS displays the following message:

```
THE NAME OF THE DEFAULT LOAD DEVICE IS xxxx
DO YOU WANT TO SPECIFY ANOTHER DEFAULT LOAD DEVICE?
(Y/N)
```

If the device name (`xxxx`) is the device you want to be the load device, enter **no** and SUS returns you to the **QUERY** menu without changing the device name.

If you want to specify a device name other than the one displayed, enter **yes** and SUS displays the following message:

```
ENTER DEVICE NAME -
```

Enter the four-character name of the device that you select to become the load device. If SUS accepts the name entered, it displays the following message:

```
THE NAME OF THE DEFAULT LOAD DEVICE HAS BEEN CHANGED
    TO (yyyy)
PRESS SPACEBAR TO CONTINUE
```

Pressing the < **spacebar** > terminates the routine and returns you to the **QUERY** menu.

Set TOD Wake-Up Alarm

The SET TOD WAKE-UP ALARM selection works with the PMC IV Software Power Control On/Off feature. It does not operate with a PMC III.

Note: *This function requires the use of a PMC IV backplane with the Power On/Off Control strap in the AUTO position.*

This selection permits you to use SUS to display and/or change the following items, without loading an operating system:

- TOD clock setting
- TOD Wake-Up Alarm setting
- Activate Software Power-Down (shutdown)

If SET TOD WAKE-UP ALARM is selected on a PMC IV system, SUS displays the following sequence of input requests/messages responses. The times and dates shown here are examples only.

```
TOD CLOCK SET TO --

DAY OF WEEK ------------>      06
MONTH ------------------>      01
DAY OF MONTH ------------>     17
HOURS ------------------->     23
MINUTE ------------------->    59

CHANGE? (Y/N)
```

SUS accepts no response other than y or n. Enter **n** to advance to the SET TOD WAKE-UP ALARM event without changing the current clock settings. Enter **y** to go to the following sequence to change the clock fields:

```
ENTER DAY OF WEEK --> (01-07)
```

Enter a two-digit value within the range shown, and press < **cr** >. SUS then displays:

```
ENTER MONTH -----> (01-12)
```

Enter a two-digit value within the range shown, and press < **cr** >. SUS then displays:

```
ENTER DAY OF MONTH -----> (01-31)
```

Enter a two-digit value within the range shown, and press < **cr** >. SUS then displays:

```
ENTER HOUR -----> (00-23)
```

Enter a two-digit value within the range shown, and press < **cr** >. SUS then displays:

```
ENTER MINUTE -----> (00-59)
```

Enter a two-digit value within the range shown, and press < **cr** >.

SUS now displays the new clock values followed by the TOD wake-up alarm display:

```
TOD WAKE-UP ALARM SET TO --

DAY OF WEEK ------------->     05
MONTH ------------------->     11
DAY OF MONTH ------------>     20
HOUR -------------------->     23
MINUTE ------------------>     10

CHANGE? (Y/N)
```

SUS accepts no response other than y or n. Enter **n** to advance to the SHUTDOWN NOW? (Y/N) request without changing the current alarm settings. Enter **y** to go to the following sequence to change the alarm clock fields.

In setting these wake-up alarm fields, SUS permits the flexibility of setting the field to a specific value (such as 01 for Monday) or to a "don't care" value. For example, if the day of the week must be Monday, enter **01** < **cr** >. If you do not care what day of the week the alarm wakes up the system, enter **dd** followed by < **cr** >.

As another example, if the minute field of the alarm is to activate the wake-up anytime the low-order minute digit is 5, enter **d5** < **cr** >. In this example, the alarm wakes up the system when the minute value reaches 05, 15, 25, etc.

```
ENTER DAY OF WEEK --> (01-07)
```

Enter a two-digit value within the range shown (or **d**), and press < **cr** >. SUS then displays:

```
ENTER MONTH -----> (01-12)
```

Enter a two-digit value within the range shown (or **d**), and press < **cr** >. SUS then displays:

```
ENTER DAY OF MONTH -----> (01-31)
```

Enter a two-digit value within the range shown (or **d**), and press < **cr** >. SUS then displays:

```
ENTER HOUR -----> (00-23)
```

Enter a two-digit value within the range shown (or **d**), and press < **cr** >. SUS then displays:

```
ENTER MINUTE -----> (00-59)
```

Enter a two-digit value within the range shown (or **d**), and press < **cr** >. SUS now displays the new clock values followed by the Shutdown display:

```
SHUTDOWN NOW? (Y/N)_
```

SUS accepts no response other than y or n. Enter **y** to shut the unit down now. Enter **n** to terminate this routine without shutting down.

If the requested shutdown does not occur, SUS displays the following:

```
SHUTDOWN DID NOT OCCUR BECAUSE THE SYSTEM BACKPLANE
DOES NOT HAVE A SOFTWARE POWER CONTROL SHUNT
```

or

```
THE SOFTWARE POWER CONTROL SHUNT ON THE SYSTEM BACK-
PLANE IS SET TO MANUAL PRESS SPACEBAR TO CONTINUE
```

Install System

The INSTALL SYSTEM function permits the initial installation of the operating system software or the installation of an updated or revised software release that is loaded in a streaming tape.

Because the SUS releases perform this function differently, this publication contains separate descriptions of the INSTALL SYSTEM function.

After the INSTALL SYSTEM function is selected, the SUS requests the name of the device from which the software is to be installed. If no device name is entered, SUS selects the default (assumed) device list. SUS checks for all of the following devices (in the order listed):

- ssg1
- st01

Next, the SUS instructs the operator to insert the correct system media and press the < **spacebar** >.

If you select a flex device after inserting the media, the SUS finds and loads the required file from the installation disk. If a tape device was selected, the SUS gives the operator the option of retensioning (Y/N) the tape before it loads the first file that follows the boot block. If the load operation is successful, the SUS transfers control to the loaded file. Any additional messages or displays come from the operating system software.

For a description of the complete system installation procedures, refer to the Software Installation Guide.

Figure 1-10 shows the menu sequence that starts the INSTALL SYSTEM function.

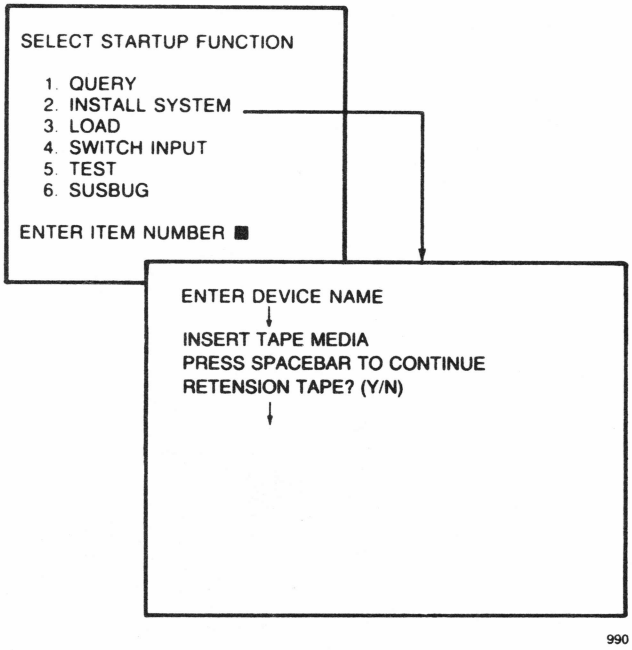

Figure 1-10. Install System Menu Sequence

Load (File)

The LOAD file function permits the load to be performed from any specified floppy disk, hard disk, or streaming tape drive. The LOAD file routine requires the selection of a device name or the default device specified in QUERY will become the specified device. If the selected load device is a disk, the SUS also requires the entry of a complete filename (pathname). If the selected load device is a streaming tape drive, the SUS loads only the first file (following the boot block). The file must agree with the operating system restrictions and the pathname cannot contain more than 80 characters.

If the specified file is loaded successfully, the SUS displays PRESS

SPACEBAR TO CONTINUE. If you press the < **spacebar** > the SUS transfers control to the file.

Figure 1-11 shows the menu sequence that is used to perform the LOAD file function.

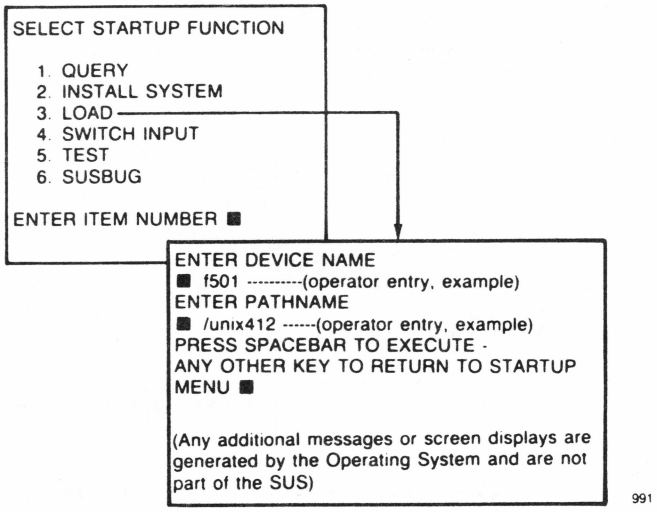

Figure 1-11. Load File Menu Sequence

Switch Input Terminals

The SWITCH INPUT terminals function permits the selection of a different terminal (port) as the SUS input device. This function enables the following terminals (ports) for selection as the input device:

- PMC channel A (at 300 or 1200, 2400, and 9600 baud)
- PMC channel B (at 9600 baud)
- HIO channel 0 (at 9600 baud)

When the SWITCH INPUT terminals function is selected, the SUS enables input polling of all three ports and waits for an input from one of the terminals. The first terminal that requests input service from the SUS is the terminal that becomes the new input device.

The SWITCH INPUT function has no menus of its own. The SUS outputs this menu to all three I/O ports and waits for one of these ports to respond. The SUS then selects the responding port as the only input port.

Figure 1-12 shows the menu sequence that is used to perform the SWITCH INPUT terminals functions.

This subsection describes the TEST function, which is selected from the **SELECT START UP FUNCTION** menu, and the different test subfunctions that are selected from the **TEST** menu.

Test Menu Selections

Select TEST from the **SELECT START UP FUNCTION** menu to perform the following functions from the **TEST** menu:

- Test Loop
- Flex Tests
  - — Flex Drive Scope Loop
  - — Flex Write/Verify
- Tape Tests
  - — Retension Tape
  - — Read Tape
- Memory Tests
- PMC Tests
- Loadable Tests
- Multibus Board Tests
- Memory Dump

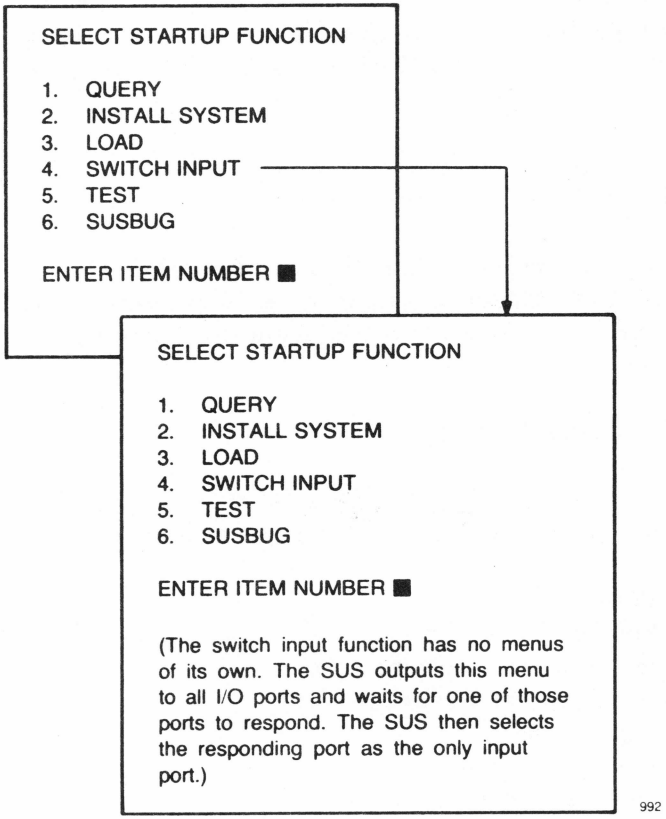

Figure 1-12. Switch Input Menu Sequence

Figure 1-13 shows the current versions of the **TEST** menu.

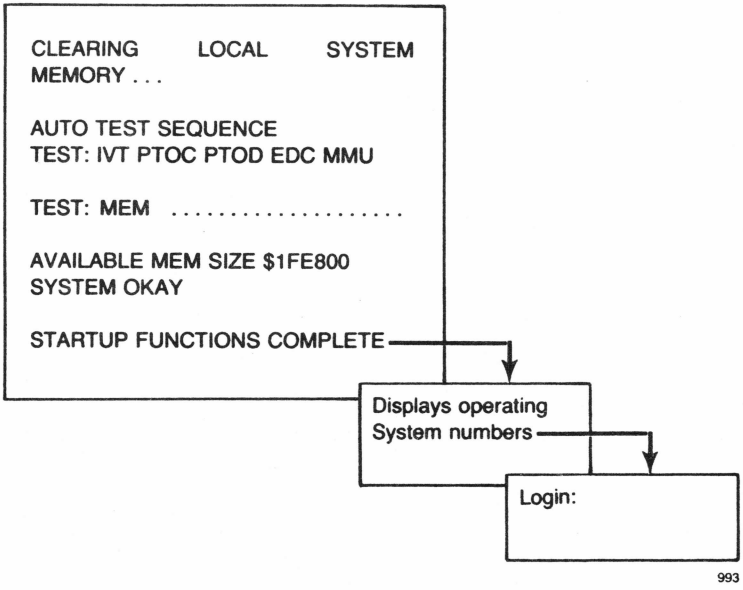

Figure 1-13. Selecting the Test Function

The following sections describe the selections of the **TEST** menu.

Test Loop

The following subsections describe the selections of the **TEST** menu. The TEST LOOP repeatedly performs the complete set of start-up diagnostic tests to verify all basic hardware elements in the system. If an error occurs during a TEST LOOP, the diagnostic test creates an error record (to be stored in the system error log) and displays a summary of that error record on the I/O device. If the error is a

degraded error the SUS updates the failure count and continues within the same loop. If the error is a critical error, the SUS terminates that loop and starts a new loop.

Figure 1-14 is an example of the menu sequence that is used to perform the `TEST LOOP` function.

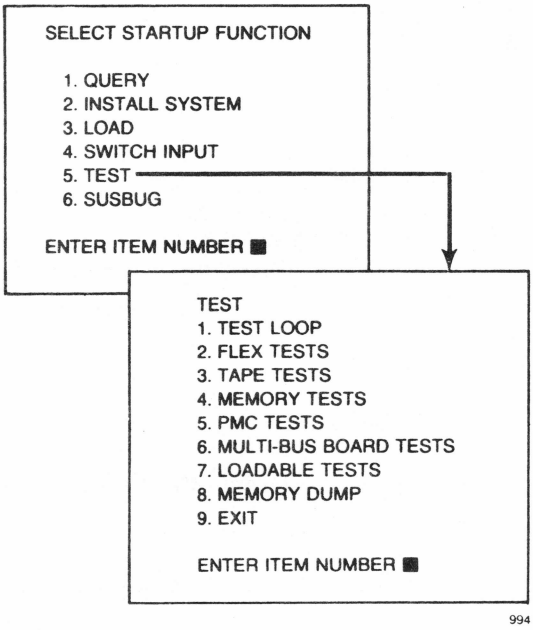

Figure 1-14. Test Loop Menu Sequence

Use the following procedure to perform the TEST LOOP function:

1. From the **SELECT START UP FUNCTION** menu, select **TEST**. The SUS advances to the **TEST** menu to permit the selection of the TEST LOOP subfunction.

2. From the **TEST** menu, select TEST LOOP. To perform the TEST LOOP function repeatedly, you must move the AUTO LOAD/ MANUAL switch (switch S2 on the PMC module) to the AUTO LOAD position and press the < **spacebar** > as instructed by the SUS message.

   If this switch is not moved to the AUTO LOAD position, the SUS performs the test loop one time and then returns to the **TEST** menu. If an error occurs when the test is performed with the switch in the MANUAL position, the test sequence stops and you must press the < **spacebar** > to continue.

   As the SUS performs the test loop, it displays the name of each test performed during the loop. Refer to the "Start-Up Test Description" subsection of this section for information about the test names.

3. The SUS performs the start-up tests repeatedly until either the AUTO LOAD/MANUAL switch is moved to the MANUAL position or until you press a key.

   If an error occurs with the switch in the AUTO LOAD position, the SUS displays an error report and continues the test.

Note: *Moving the AUTO LOAD/MANUAL switch to the MANUAL position does not terminate testing until the current test loop is complete; therefore, there may be some delay between the time the switch is moved and the time that the SUS returns to the* ***SELECT START UP FUNCTION*** *menu.*

4. From the **SELECT START UP FUNCTION** menu, select QUERY to display any error record(s) that were created during the test loop(s).

Flex Tests

Select FLEX TESTS from the **TEST** menu to perform the flex disk test routines.

Flex Drive Scope Loop

The flex drive scope loop permits certain oscilloscope and/or adjustment procedures to be performed. When selected, the loop repeatedly reads a specified disk address from a selected flex (floppy) disk device.

1. From the **TEST** menu, select FLEX DRIVE SCOPE LOOP. The SUS displays the following message and menu sequence:

```
FLEX DRIVE SCOPE LOOP
ENTER DEVICE NAME
```

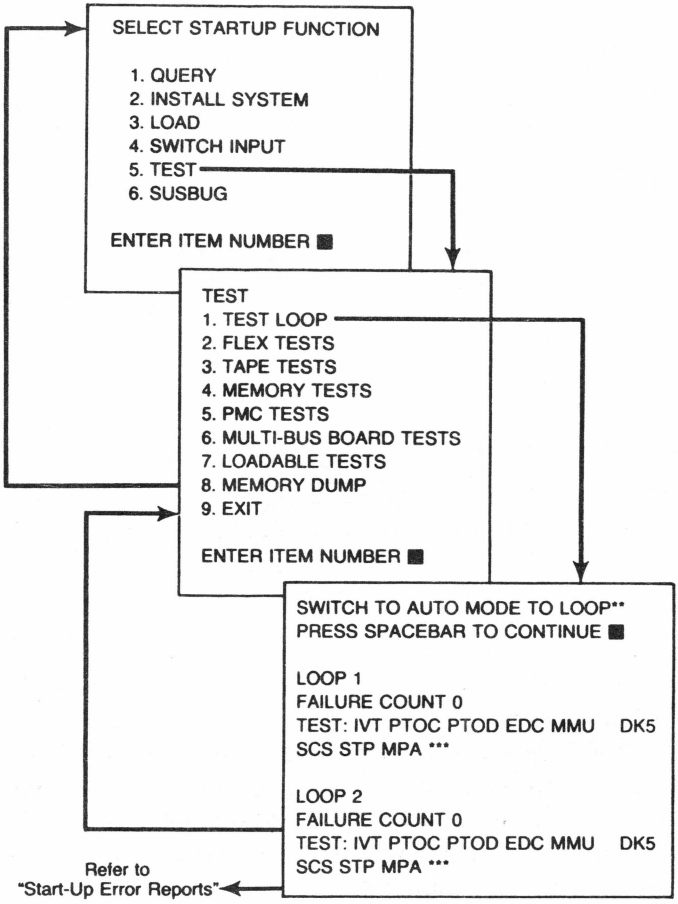

** If the AUTO LOAD/MAN switch (S2 on the PMC module) is not moved to the AUTO LOAD position, the SUS performs the test loop one time and then returns to the TEST menu.

*** Specific tests depend on the system configuration. 995

Figure 1-15. Flex Drive Scope Loop Menu Sequence

2. Enter the four-character name of the floppy disk drive that you want to select. Refer to the "Diagnostic Hardware Names" subsection of this section for information about the standard hardware name conventions that must be used. The SUS displays the following message:

```
ENTER COORDINATES
TRACK-
```

3. Enter the number of the track to be read. The SUS does not verify that the entered number is valid. Terminate the response with the < **cr** > key. The SUS displays the following message:

```
SECTOR-
```

4. Enter the number of the sector to be read. The SUS does not verify that the entered number is valid. Terminate the response with the < **cr** > key. The SUS displays the following message:

```
HEAD-
```

5. Enter the number of the head to be used. The SUS does not verify that the entered number is valid. Terminate the response with the < **cr** > key. The SUS repeats the TRACK-, SECTOR-, and HEAD- messages (Steps 2, 3, and 4) to permit the selection of the multiple addresses. To end this selection loop, press < **cr** > without entering a number. The SUS displays the following message (the device name and disk address shown here are only examples):

```
f501 TEST LOOP
TRACK-76 SECTOR-15 HEAD-1
RECONFIGURE Y/N/Q
```

6. Enter one of the following responses:

   Y-Enter **Y** if the selected device name or disk address is wrong and a new selection is desired.

   N-Enter **N** to start the loop using the selected name and address.

   Q-Enter **Q** to exit this sequence and return to the **FLEX TESTS** menu without starting the scope loop.

   If the response is **N**, the SUS displays the following message before starting the loop:

```
INSERT DISK
SWITCH TO AUTO MODE TO LOOP
PRESS SPACEBAR TO CONTINUE
```

7. Move the AUTO LOAD/MANUAL switch to the AUTO position and press the **< spacebar >** to start the loop. The SUS displays the following message:

```
LOOPING . . .
```

   With the SUS looping on the selected disk address, you may perform any desired scope or adjustment procedures.

   When those procedures are complete, activate the RESET switch (S2 on the PMC) to terminate the loop.

Flex Write/Verify

The FLEX WRITE/VERIFY routine formats and writes a data pattern to block zero of the media in flex disk device sfd1. The FLEX WRITE/VERIFY routine formats and writes a data pattern to block zero of the media in flex disk device sfd1. The routine automatically

selects flex disk device sfd1 and does not permit the selection of any other device. After writing the block, the test reads the data from that same block and compares each byte of the data read to the data written.

WARNING

This routine destroys all data that is in track 0 (block 0, the boot block is in track 0). Although the routine displays a message warning of this data destructive function, it does not protect valid data that is recorded in this block.

The block 0 (boot block) created by this routine does not contain a complete and valid block zero boot block. When this routine terminates, the simulated boot block contains only enough information to enable the disk start-up (level-0) diagnostic tests. The boot block does not contain enough correct boot block information to perform an operating system load operation.

The `FLEX/WRITE VERIFY` routine does not record errors in the SUS error log. The routine reports the same errors as the 5.25-inch flex disk level-0 diagnostic program. For information about the `FLEX WRITE/VERIFY` error codes, refer to the DK5 error codes (7xxx) in the "Start-Up Error Codes" subsection of the "Error Codes" section of this book.

Figure 1-16 shows the menu sequence that is used to perform the `FLEX WRITE/VERIFY` routine.

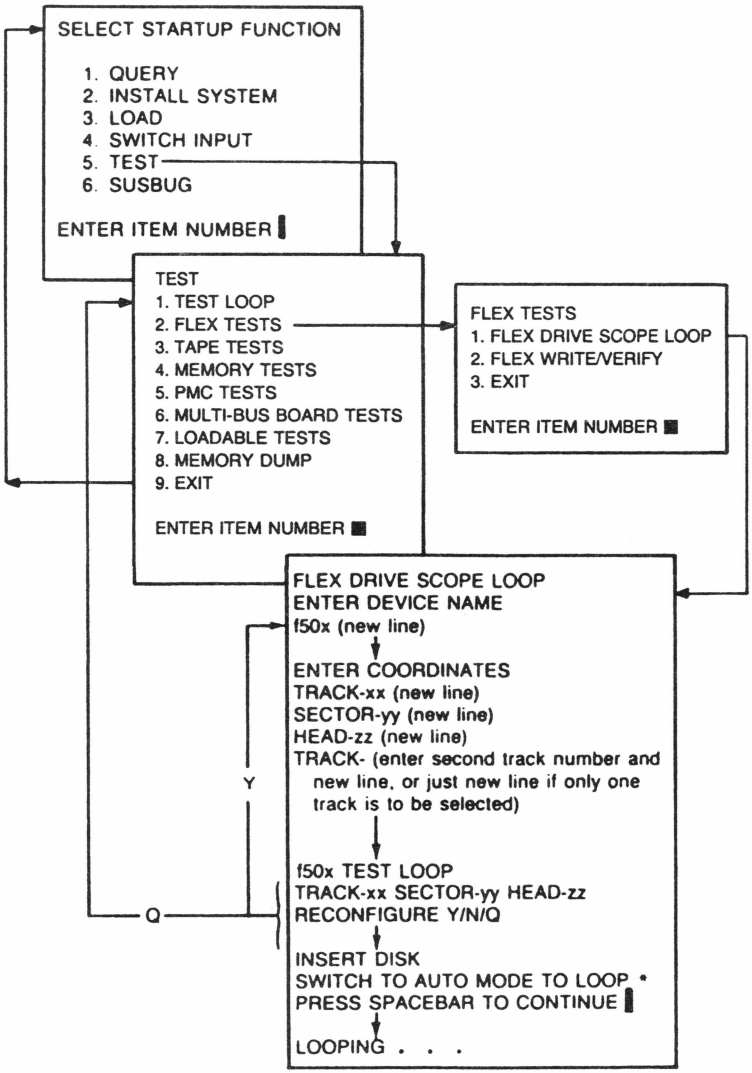

*If the MANUAL/AUTO LOAD switch (S2 on the PMC module) is not moved, the SUS performs the test loop one time and then returns to the Test menu. 996

Figure 1-16. Selecting the Flex Write/Verify Function

Tape Tests

Select TAPE TESTS from the **TEST** menu to perform the TAPE TEST routine.

Retension Tape

Select the TAPE TEST option from the **TEST** menu and then choose RETENSION TAPE to retension your tape.

The RETENSION TAPE test retensions the streaming tape by streaming it to the end of tape (EOT) and then rewinding it to the beginning of tape (BOT).

The test sequence displays the following input request and instruction displays:

```
ENTER DEVICE NAME
```

Enter the name of the streaming tape drive (**st01** or **ssg1**) that contains the tape cartridge to be retensioned.

```
INSERT SYSTEM MEDIA
PRESS SPACEBAR TO CONTINUE
```

If the selected streaming tape drive does not already contain the cartridge that is to be retensioned, install the correct cartridge. When the cartridge is installed, press the < **spacebar** > to activate the retension sequence.

Read Tape

The READ TAPE test function repeatedly reads groups of blocks from the tape installed in the selected drive.

When the test starts, the SUS displays the following input request instruction:

```
ENTER DEVICE NAME
```

Enter the correct streaming tape device name (**st01** or **ssg1**), press **< cr >**, and continue.

```
INSERT SYSTEM MEDIA
PRESS SPACEBAR TO CONTINUE
```

Install the tape to be read and press the **< spacebar >** to activate the READ TAPE test sequence.

As the test proceeds, the SUS displays a one-line status report like the following example:

```
BLOCK = xxxx                    STATUS = yyyy
```

In this report xxxx represents the physical block number and yyyy represents the tape controller status for that read operation. After each group of blocks is read, the SUS updates this report to indicate the result of the completed read operation.

When the test reads the last data block, the SUS displays:

```
BLANK TAPE ENCOUNTERED ...
```

Table 1-4 shows the meanings of the values in the status field.

Table 1-4. Tape Drive Status Bytes

BYTE 0	BYTE 1	Error Status Description
0 0 0 0 0 0 0 0	0 0 0 0 0 0 0 0	The operation terminated successfully.
1 1 0 X 0 0 0 0	0 0 0 0 0 0 0 0	There is no cartridge in the selected drive or the cartridge was removed while the select light was on.
1 1 1 1 0 0 0 1	0 0 0 0 0 0 0 0	The selected drive is not present in the system.
1 0 0 1 0 0 0 0	0 0 0 0 0 0 0 0	The WRITE, WRITE FORMAT, or ERASE operation cannot be performed because the selected drive contains a write-protected cartridge.
1 0 0 0 1 0 0 0	0 0 0 0 0 0 0 0	The tape passed the End Of Media (EOM) hole during a write command.
1 0 0 X 0 1 0 0	1 0 0 0 1 0 0 0	The read or write function is terminated and the tape is at the BOT position because this block transfer failed to recover after 16 write, write format, read, or read format tries failed.
1 0 0 X 0 1 1 0	0 0 0 0 0 0 0 0	The last block transferred contains a CRC error. This block transfer failed to recover after 16 tries.
1 0 0 X 0 1 1 0	0 0 0 0 0 0 0 0	The last block transferred contains a CRC error. The block contains filler data to keep the block count correct. This block transfer failed to recover after 16 tries.
1 0 0 X 0 1 1 0	1 0 1 0 0 0 0 0	No data was detected in the block. Two tries failed to detect data (or a file mark). No filler data was transferred. The last transferred block was a good block.

Table 1-4. Tape Drive Status Bytes (cont.)

BYTE 0	BYTE 1	Error Status Description
1 0 0 X 0 0 0 1	1 0 1 0 0 0 0 0	No data was detected in the block. Two tries failed to detect data (or a file mark). No filler data was transferred. The last transferred block was a good block.
1 0 0 X 0 0 0 1	0 0 0 0 0 0 0 0	A filemark block was read during a READ or READ FILEMARK instruction.
X X X X 0 0 0 0	1 1 0 0 X 0 0 0	The tape command byte contained an invalid bit configuration.
X X X X 0 0 0 0	1 0 0 0 X 0 0 1	The Multibus Streaming Tape Controller generated a POWER ON/RESET signal to the tape drive since the last operation.

Memory Tests

Select MEMORY TESTS from the **TEST** menu to perform the following memory array module tests:

- Error Detection and Correction Logic (EDC)
- Memory Management Unit Logic (MMU)
- Memory Array Module(s) (MEM)
- Cache Memory (CCH)
- Address Translation Cache (ATC)

After the appropriate method is used to select the memory test sequence, the SUS displays the following message:

```
SWITCH TO AUTO MODE TO LOOP
PRESS SPACEBAR TO CONTINUE
```

If the AUTO LOAD/MANUAL switch (S2) is not moved to the AUTO position, the SUS performs this test sequence only one time and then returns to the **TEST** menu. If the switch is moved to the AUTO position, the SUS performs the test sequence repeatedly until one of the following occurs:

- An error is detected.
- The RESET switch (S1) is activated.
- The AUTO LOAD/MANUAL switch (S2) is moved to the MANUAL position.

If an error occurs, the SUS terminates the loop and displays an error report.

PMC Tests

Select `PMC TESTS` from the **TEST** menu to perform the following PMC tests:

- Interval Timer (IVT)
- Time of Day Clock (TOD)
- Floating-Point Processor (FPP)
- PMC Port C (PT0C) and Port D (PT0D), (PMC IV only)

After selecting PMC tests from the **TEST** menu, the SUS displays the following message:

```
SWITCH TO AUTO MODE TO LOOP
PRESS SPACEBAR TO CONTINUE
```

If the AUTO LOAD/MANUAL switch (S2) is not moved to the AUTO position, the SUS performs this test sequence only one time and then returns to the **TEST** menu. If the switch is moved to the AUTO position, the SUS performs the test sequence repeatedly until one of the following occurs:

- An error is detected.
- The RESET switch (S1) is activated.
- The AUTO LOAD/MANUAL switch (S2) is moved to the MANUAL position.

If an error occurs, the SUS terminates the loop and displays an error report.

If the RESET switch is activated, the SUS terminates the test sequence.

If the AUTO/MANUAL LOAD switch is moved to the MANUAL position, the SUS terminates the test sequence (at the end of this loop) and returns to the **TEST** menu.

The "Start-Up Test Description" subsection of this section describes each of the start-up tests that are performed by this menu selection.

Multibus Boards Test

The `MULTI-BUS BOARD TEST` activates the start-up diagnostic tests for the Multibus controller boards of the system (except the board whose tests are disk resident).

The following is a list of Multibus boards and their associated test names:

- STP - Streaming Tape Controller or Mass Storage Controller (tape functions, U 5000/30 and U 5000/50 only)
- DMSC - Mass Storage Controller (disk functions, U 5000/30 and U 5000/50 only)
- HIO - High Performance Serial I/O Controller
- SCS - Small Computer System Interface (SCSI) Host Adapter and SCSI Mass Storage Controller
- SYT - MUX-5000 Communication Controller
- f501 flex disk (U 5000/30 and U 5000/50 only)

Loadable Tests

Loadable tests provide for the selection of the MPA and CC tests, described in the following subsections.

MPA Test (6-2-1 Sync/Async Test)

The MPA loadable test repeatedly loads (from the load device) and processes the communication tests for the Sync/Async 6-2-1 controller.

The "Start-Up Test Descriptions" subsection of this section describes the MPA start-up diagnostic tests.

Memory Dump

Select MEMORY DUMP to copy the current contents of system memory to the tape cartridge in drive **ssg1**. (SUS can dump to any tape drive in the system.)

The Memory Dump function operates only if the following conditions exist:

- The operating system is loaded and executed.
- A Power Down sequence or a power failure occurs.
- BBU is on and power-fail recovery occurs.
- A start-up sequence is performed with the AUTO LOAD/ MANUAL switch (switch S2 on the PMC module) in the MANUAL position.

The "Start-Up Sequence" subsection of this section describes manual mode start-ups.

When the MEMORY DUMP function is selected from the **TEST** menu, SUS displays the following message before writing the memory contents to tape:

```
ENTER DEVICE NAME
```

Enter **ssg1** or **st01** (unless you are using another tape drive). SUS can dump to any tape drive in the system.

```
INSERT TAPE MEDIA
WARNING:  THIS PROGRAM OVERWRITES DATA ON TAPE
PRESS SPACEBAR TO CONTINUE
```

Insert a blank tape cartridge that has the write protect (SAFE) feature set OFF and press the < **spacebar** >. This tape should not contain valid data because, as the warning message indicates, the memory dump routine destroys any existing data by writing data to this tape.

When the < **spacebar** > is pressed, the routine streams tape to EOT, rewinds the tape, and starts writing 512-byte blocks of data from memory to the tape.

If the memory dump terminates successfully, the SUS displays a MEMORY DUMP COMPLETE message.

If an error prevents the SUS from starting (or completing) the dump, the routine displays a standard form of SUS error report, or one of the following error messages:

```
INVALID MEMORY MAP CONTENTS
PREVIOUS SYSTEM LOAD
NEEDED TO DUMP MEMORY
```

The preceding message displays because the MEMORY DUMP function was selected when the memory did not contain valid operating system software.

```
TAPE DEVICE NOT PRESENT
```

The preceding message displays because the specified tape device did not generate READY following an ON-LINE reset:

```
INVALID DEVICE NAME
```

The preceding message displays because a tape device name other than **ssg1** was entered:

```
MEMORY DUMP FAILURE
```

The preceding message indicates that the `MEMORY DUMP` utility failed to terminate successfully.

The following section contains additional messages from the dump routine to identify hardware errors, media errors, or operator errors.

Hardware Error Messages

```
CONTROLLER ERROR
DRIVE DID NOT BECOME READY FOR FIRST WRITE
BOARD DID NOT GO TO NOT READY AFTER DMA SET UP
DRIVE DID NOT INTERRUPT AFTER A WRITE
EXCEPTION OCCURRED DURING A WRITE
DRIVE CANNOT BE SELECTED
REWIND OF TAPE FAILED
```

Media Errors

```
TAPE IS WRITE PROTECTED OR WRONG CAPACITY
TAPE CARTRIDGE IS NOT IN PLACE
```

Operator Errors

```
TAPE CONTROLLER NOT IN SYSTEM
USABLE DRIVE AND CARTRIDGE WERE NOT SPECIFIED
A STREAMING TAPE DEVICE WAS NOT SPECIFIED
```

Exit

Select the EXIT function to return to the **SELECT START UP FUNCTION** menu without processing any of the **TEST** functions.

SUSBUG

The SUSBUG function provides limited access to read, write, and modify system memory and the Multibus or PMC input/output ports. When the SUSBUG function is selected from the **SELECT START-UP FUNCTION** menu, the routine displays the > character indicating that it is ready to accept and perform one of the following instructions:

- **R** - Read byte
- **W** - Write byte
- **G** - Perform a memory resident operating system routine (GO)
- **X** - Exit SUSBUG
- SET - Set access length for read and write (default is byte)
- OUTX - Redirect console output

The following subsections describe how to select, use, and terminate the **SUSBUG** commands.

R (Read)

When **SUSBUG** displays the > request, enter:

```
R [hexadecimal address] < cr >
```

The read instruction reads and displays the contents of the specified address. SUSBUG increments the address, to permit the reading of the contents of the next higher address without having to enter the address. To read memory and stay at the same address, press equal (=) followed by < **cr** >.

To terminate the read instruction, enter period (.), followed by < **cr** >. SUSBUG returns to the > request to permit the selection of a new instruction.

W (Write)

When SUSBUG displays the > request, enter:

W [hexadecimal address] [data] < cr >

The write instruction writes the specified data into the specified address. SUSBUG increments the address, to permit the writing of data into the next higher address without having to enter that address. To write data and stay at the same address, press equal (=) followed by < **cr** >.

To terminate the write instruction, enter period (.) followed by < **cr** >. SUSBUG returns to the > request to permit the selection of a new instruction.

G (GO instruction)

When SUSBUG displays the > request, enter:

G [hexadecimal address] [data] < cr >

The GO instruction processes any routine that starts at the specified address. If no address is entered, SUS returns to the **SELECT START UP FUNCTION** menu.

X (EXIT SUSBUG)

When SUSBUG displays the > request, enter:

X < cr >

The exit instruction returns the SUS to the **SELECT START UP FUNCTION** menu.

SET (Set Access Length)

When **SUSBUG** displays the > request, enter one of the following:

- **set b** — set the access length to byte
- **set w** — set the access length to word
- **set l** — set the access length to long word

After entering the instruction, press **< cr >**. The access length setting remains effective until a different set instruction is entered or until SUSBUG is exited.

OUTX (Re-Direct Console Output)

When SUSBUG displays the > request, enter one of the following:

- **outb** — direct console I/O to PMC port b (pt0b).
- **outc** — re-direct console I/O from port b (pt0b) to PMC port C (pt0c). Port C is available only on PMC IV systems but is not supported on this release.
- **outdl** — redirect console I/O from port b (pt0b) to PMC port D (pt0d). Port D is available only on PMC IV systems, but is not supported on this release.

After entering the instruction, press < **cr** >. The outx instruction does not become effective until the SWITCH INPUT TERMINALS function of the **SELECT START UP FUNCTION** menu is selected.

Start-Up Diagnostics

In addition to the start-up functions previously described, SUS contains diagnostic test programs and/or subroutines to verify the proper operation of the basic hardware modules of the system. These start-up tests are often referred to as level-0 diagnostics.

Some SUS diagnostic programs perform the completed start-up test on a specific module, other programs just activate a start-up (level-0) test that is in ROM on board the module to be tested, and some tests are actually on disk and are only loaded into memory by the SUS.

This subsection describes how to activate the start-up diagnostic tests in the automatic and manual modes, describes each test, and shows how the SUS reports errors that may occur during the tests.

Activating Start-Up Diagnostics

The start-up diagnostics operate in either one of the two start-up modes:

- Automatic Start-Up
- Manual (interactive) Start-Up

Automatic Start-Up Diagnostics

The automatic start-up mode initializes and tests the basic hardware modules (including the load device), loads the operating system in memory, and transfers control to that software with no operator action required after the SUS is activated. Of course the SUS cannot

perform a completely automatic start-up operation and load the operating system software until all the hardware and software installation procedures are performed at least once.

The SUS performs three different automatic start-up sequences: cold start, warm start, and hot start. The degree of testing and the type of tests that are performed during each start-up sequence is different.

Use the following procedure to activate the automatic start-up sequence and to perform the diagnostic tests that are associated with cold start, warm start, or hot start.

1. Put the AUTO LOAD/MANUAL switch (switch S2 on the PMC module) in the AUTO LOAD position. The location of the PMC module and switches is shown in the "Activating Start-Up Diagnostics" subsection of this section.

   Note: *The normal position of switch S2 is in the AUTO LOAD position. The top cabinet panel must be removed to check or change the position of switch S2.*

2. Turn on the POWER switch, or move the RESET switch (switch S1 on the PMC module) toward the rear of the machine and then release it. Activating the SUS with the RESET switch always performs a cold start sequence.

During the automatic start-up sequence, the SUS displays a series of messages that identify the activities that the start-up sequence is performing. Figure 1-17 shows an example of the SUS messages that occur during an automatic cold start sequence. The SUS displays the names of the start-up diagnostic tests as they are performed during the sequence. The SUS performs each test only one time during the start-up sequence.

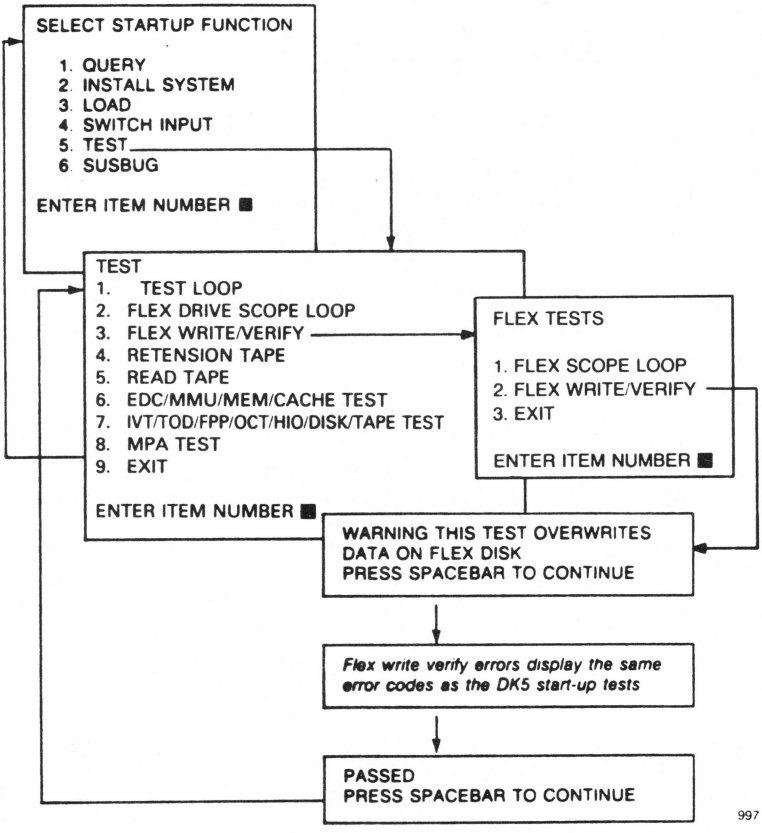

Figure 1-17. SUS Message (Example)

Depending upon the type of board you are testing and other variable information, you may also see messages similar to the following:

```
LOADING "/unix" FROM DEVICE SDA1
LOAD COMPLETE
AVAILABLE MEM SIZE = $3FE800
SYSTEM OKAY
```

Following this, the login banner appears.

The SUS uses the following methods to identify errors that occur during automatic start-up sequences:

- Sets an error configuration in the four PMC module status indicator LEDs (not all errors are reported to the LEDs)
- Records the error in the system error log (an area of reserved system memory)
- Displays the error on the terminal(s) connected to the following ports:
  - — PMC channel A
  - — PMC channel B

The SUS diagnostic tests detect and report the following types of errors that may occur during an automatic start-up sequence.

Degraded Error

Degraded errors decrease the performance capabilities of the system, but do not prevent the system from performing a required function.

When a system degraded error occurs, the SUS displays a summary of the system error log record that this error creates, and continues the start-up sequence.

Critical Error

Critical errors prevent the system from performing a required function; therefore, if a system critical error occurs during start-up, the start-up sequence cannot continue.

When a system critical error occurs during start-up, the SUS records the error in the system error log (if the start-up sequence has advanced to the point of establishing the log), displays a short version of the error log record, displays the SWITCHING TO INTERACTIVE MENU message, and waits for the < **spacebar** > to be pressed. Pressing the < **spacebar** > advances the SUS to the **SELECT START UP FUNCTION** menu.

Manual (Interactive) Start-Up

The manual (interactive) start-up mode performs some basic hardware module initialization and verification, but does not automatically perform the basic hardware module tests.

Manual mode diagnostic testing is performed through the selection of the TEST function from the **SELECT START UP FUNCTION** menu. The manual mode TEST function permits the processing of one or more start-up diagnostic tests.

Use the following procedure to activate the manual (interactive) start-up mode and to select the manual mode TEST function.

1. Put the AUTO LOAD/MANUAL switch (switch S2 on the PMC module) in the MANUAL position (toward the front of the machine). The location of the PMC module and PMC switches is illustrated and described in the "Activating Start-Up Subsystem" subsection of this section.

2. Turn on the POWER switch, or move the RESET switch (switch S1 on the PMC module) toward the back of the machine and then release it.

The manual mode selection is complete when the SUS displays the **SELECT STARTUP FUNCTION** menu shown in Figure 1-4.

Start-Up Test Descriptions

This subsection describes the SUS diagnostic test programs. The subsection is organized by program name with a description in parentheses to identify the component, device, controller, or board associated with the test name.

Error records that are created by these diagnostic programs contain the program name in the field called LOGTASK. The "Error Codes" subsection at the end of this section describes the errors that are detected and recorded by start-up diagnostic programs.

Note: *When the general microprocessor tests are performed, the SUS has not initialized enough of the system to permit proper error logging; therefore, errors that occur during those tests are reported directly to the I/O device and are not recorded in the system error log.*

General Microprocessor Test

The general microprocessor tests are performed on power-up or reset operations (cold, warm, and hot starts). If any of these tests fail, the start-up sequence terminates immediately. The following subsections identify the general microprocessor tests.

ROM Checksum Test - The SUS performs a standard one-byte checksum calculation for each of the 32-kilobyte SUS ROMs.

PMC Status Indicator (LED) Test

The PMC status LED indicator test provides a visual indication of the performance of all four of the PMC LEDs DS1-DS4. The SUS depends on operator verification to know if the LEDs operate properly. This test activates the LEDs as follows:

- Power-on turns all LEDs on.
- SUS turns all LEDs off.
- SUS turns all LEDs on.
- SUS turns all LEDs off if the start-up sequence is successful.

If the SUS detects an error during start-up, the LEDs are set to a unique configuration that identifies the error. Table 1-5 shows the meaning of the DS1-DS4 PMC LED configurations.

Table 1-5. PMC Status Indicators

RUN	DS1	DS2	DS3	DS4	STATUS DESCRIPTION
⊗	○	○	○	○	The start-up sequence (SUS) completed successfully. The OS has control.
⊗	⊗	○	○	○	PMC ROM program has a checksum error, or Release/Version numbers in the Odd ROM set are not the same as the numbers in the Even ROM set.
⊗	○	⊗	○	○	Memory 'click' map generated on WARM start not the same as map generated on last COLD start.
⊗	⊗	⊗	○	○	Unexpected interrupt occurred during transfer of control from SUS to OS (OS ISRs not in place).
⊗	○	○	⊗	○	The PMC on-board RAM is bad.
⊗	⊗	○	⊗	○	The system RAM area used for SUS/OS interface storage is bad.
⊗	○	⊗	⊗	○	One of the PMC timers is bad.
⊗	⊗	⊗	⊗	○	The TOD clock is bad.
⊗	○	○	○	⊗	The MMU logic is bad.
⊗	⊗	○	○	⊗	The PMC error detection and/or correction (EDC) logic is bad.
⊗	○	⊗	○	⊗	The system RAM area available to the user is bad.
⊗	⊗	⊗	○	⊗	The PMC logic is bad or the BBU (Memory Support System) has a fault.
⊗	○	○	⊗	⊗	The 8-Channel I/O Controller is bad.
⊗	⊗	○	⊗	⊗	An unexpected interrupt occured during the start-up sequence.
⊗	○	⊗	⊗	⊗	Not used.
⊗	⊗	⊗	⊗	⊗	The SUS is testing the PMC status indicators. All indicators turn off if start-up terminates successfully. All indicators remain on if a degraded error occurs during start-up followed by a successful OS load operation.

○ = LED off ⊗ = LED on C1039

PMC Scratch Pad RAM Test

The SUS performs the following tests to verify the function of the PMC on-board RAM:

- Address line decoding
- Stuck bits
- Pattern sensitive data errors

SUS/OS Interface Memory Test

The SUS verifies the reliability of the Start-Up Subsystem/Operating System (SUS/OS) Interface area of system memory. The SUS performs one of two different tests depending on the type of start-up sequence as follows:

Cold Start

This test looks for address line and stuck bit failures.

Note: *Release 5.x cold start does not destroy contents.*

Warm Start

This test does not destroy the original contents of the SUS/OS IF area or look for address-like failures. The test saves the contents of memory, tests for stuck bits, and then restores the contents of memory to the original locations.

Hot Start

The hot start test is the same as the warm start test. The following conditions must exist to perform a hot start:

- The warm string field of the SUS/OS IF area contains WARM.
- The TIME-OF-DAY (TOD) time stamp field is set to time of power failure.
- The OS POWER FAIL ENTRY ADDRESS field is initialized.
- The duration of the power failure is less than 21 seconds.

Note: *Some versions of the operating system do not use the hot start capabilities of the SUS.*

PMC (Processor Memory Controller) Tests

The PMC tests verify the following functions of the Processor Memory Controller logic blocks (devices).

Note: *Not all versions of PMCs include all of these devices, and not all SUS releases perform all of these tests.*

IVT (Interval Timer Tests)

The IVT diagnostic tests verify that the four PMC interval timers perform the following functions:

- All timer bits change from zero to one and from one to zero (no stuck bits).
- All timers count in the correct sequence.
- Each timer generates all expected interrupts and uses the correct interrupt vector.

If any of these tests fail, the SUS terminates the start-up sequence immediately.

TOD (Time-Of-Day Clock Tests)

The TOD diagnostic tests verify that the PMC Time-Of-Day clock chip performs the following listed functions. TOD tests are performed only during cold starts. TOD tests are not performed during warm or hot starts because the tests would destroy previously initialized TOD clock values.

- All TOD clock counter and latch bits change from zero to one and from one to zero (no stuck bits).
- The TOD clock address decode logic permits access to all TOD clock counters and latches.
- The TOD clock GO instruction initializes (synchronizes) all TOD counters to the correct values.
- All TOD clock counters count in the correct sequence.
- The TOD clock chip interrupt logic generates all expected interrupts.
- The TOD clock status register resets correctly.

If any of the TOD clock tests fail, the SUS generates an error report and the start-up sequence continues.

EDC (Error Detect and Correct Tests)

The EDC diagnostic tests verify that the PMC Error Detect and Correct Logic performs the following functions:

- Detects and corrects all Single Bit Errors (SBE) for selected data patterns
- Generates all expected SBE interrupts

- Generates the correct syndrome (check) bit patterns for SBEs
- Enables and disables the memory update (refreshes) logic correctly
- Detects all Double Bit Errors (DBE) for selected data patterns and the associated check bits
- Generates all expected DBE interrupts

If any of these tests fail, the SUS reports an error and terminates the start-up sequence.

MMU (Memory Management Unit Tests)

The MMU diagnostic tests verify that the PMC Memory Management Unit logic performs the following functions:

- Assures that all bits of the context register, segment map RAM, and page map RAM change from zero to one and from one to zero correctly.
- The segment map and page map RAM address decode logic permits access to all locations in the respective RAMs.
- An access of a Processor Memory Bus address does not change the data stored in a Multibus memory address.
- The protection and violation logic generates the correct bus error interrupts.

If an error occurs during any of the MMU tests, the SUS reports the error and terminates the start-up sequence immediately.

MEM (Memory Array Module/ PMC Cache Memory Tests)

The MEM diagnostic tests verify the proper operation of the following Memory Array Module and Cache Memory functions:

- Assures that all bits of the context register, segment map RAM, and page map RAM change from zero to one and from one to zero correctly.
- The segment map and page map RAM address decode logic permits access to all locations in the respective RAMs.
- An access of a Processor Memory Bus address does not change the data stored in a Multibus memory address.
- The protection and violation logic generates the correct bus error interrupts.

If an error occurs during any of the MMU tests, the SUS reports the error and terminates the start-up sequence immediately.

The MEM diagnostic tests destroy the contents of memory on cold start sequences, but on warm start sequences, the original memory contents are saved and then restored when the test is complete. If a critical memory error occurs during any of the MEM tests, the SUS reports the error and terminates the start-up sequence immediately.

If a Memory Array Module error occurs during any of the MEM tests, the SUS logs the error, reports it to the I/O display as a MEM error, terminates the start-up sequence if the error is a critical error, and switches to the interactive (manual) mode.

MEM (Memory Array Module) Tests

The following items describe the function of the MEM (Memory Array Module) tests:

- All RAM devices accept and hold data bit test patterns.
- All check bit RAMS accept and hold test patterns.
- The address line decode logic permits access to all available memory locations.

CCH (PMC Program and Data Cache Tests)

The CCH tests verify the following functions of the PMC program and data cache memory submodule logic:

- Cache/System memory enable/disable switch logic.
- Data and address bits turn on/off correctly.
- Cache parity logic generates parity and detects errors correctly.
- Cache Memory updates are performed correctly.

If a Cache Memory logic error occurs during any of the CCH tests, the SUS logs the error, sets a flag to indicate `no cache available`, reports the error to the I/O display as a `CCH` error, and continues the start-up sequence.

ATC (Address Translation Cache Tests)

The ATC tests verify the following function of the PMC Address Translation Cache memory logic:

- ATC (Address Translation Cache) memory enable/disable switch logic

FPP (Floating-Point Processor)

The FPP start-up diagnostic program verifies that the Floating-Point Processor (Co-Processor) on the Processor Memory Controller module correctly performs the following functions:

- The data movement test transfers different types of data values between memory and the different FPP registers.
- The program control test detects and processes exception status register values, branch conditions, and trap exception routines.
- The function and transcendental function tests calculate and move data generated by addition, subtraction, square root, and algebraic functions between memory and the FPP registers.

If an error occurs during any of the FPP tests, the SUS logs the error as a pmcb degraded error, reports it to the I/O display as an FPP0 error, and continues the start-up sequence. FPP error reports include Error Code 1 to identify the cause of the error, and Error Code 2 to identify the specific internal FPP register and value that caused the error.

Note: *This publication does not describe Error Code 2 values because the failure information provided by these codes only identifies components internal to the FPP chip and does not introduce any repair method other than replacement of the chip.*

PT0C/PT0D (PMC Port C and Port D Tests)

The pt0c and pt0d tests verify the proper operation of the interrupt vector number register for the tty port C and port D channels of the 7201 Multiprotocol Serial Communication Controller chip. The ports are not currently supported by the operating system.

HPSIO (High Performance 8-Channel I/O Controller) and DHPSIO (Dual High Performance 16-Channel I/O Controller)

The HPSIO (also known as HIO) start-up diagnostic program verifies that the High Performance Serial I/O Controller performs the following functions correctly:

- Activates and reports results of HPSIO on-board level-0 diagnostics which include:
  - — ROM checksum calculation
  - — RAM stuck bit and address decode
  - — Mailbox (MBOX) stuck bit
  - — Interrupt tests
  - — DUART tests
- HPSIO generates correct board base address to PMC
- Enables interrupts
- Initializes board interrupt vectors
- Writes to HPSIO generates interrupt
- Reads to clears interrupt
- Receives and returns IOPB addresses and statuses
- Disables interrupts
- Downloads
- Performs data turnaround

Note: *The HIO program also verifies the asynchronous TTY and parallel printer port functions of the communication controller and the 16-channel Dual HPSIO Controller. The tests operate with up to two controllers (up to 32 terminals with HPSIOs).*

If an error occurs during any of the HIO tests, the SUS logs the error, reports it to the I/O display as an HIO error, and continues the start-up sequence. HIO error reports include Error Code 1 to

identify the cause of the error and Error Code 2 to identify the failing channel.

HPMSC/SMSC SCSI Controller Tests

The HMS tests verify the proper operation of the following logic elements of the HPMSC (High Performance Mass Storage Controller), SMSC (Mass Storage Controller), HA (Host Adapter) and its SCSI (Small Computer System Interface):

- On-board ROM checksum calculation
- Multibus dual port read/write operations
- Vector area and uninitialized data area read/write operations
- Interrupt handling functions
- UART operation
- Program/Cache memory operation
  - — Data handling
  - — Addressing
- DMA chip operation
  - — Registers
  - — Cache to cache transfers
- SCSI submodule operations
  - — Buffer functions
  - — Addressing
  - — Programmed I/O
  - — DMA
  - — Chip registers
  - — Diff/Sense (SCSI only)
- Local system memory functions
  - — DMA - Cache
  - — Programmed I/O

If an error occurs during any of the HMS tests, the SUS logs the error, reports the error to the I/O display as an HMS error, and continues the start-up sequence.

SYT (MUX-5000 I/O Communication Controller Tests)

The SYT tests verify that the MUX-5000 I/O communication controller firmware self-test diagnostic program performs the following operations successfully:

- Reset
- ROM checksum calculation
- Stack addressing and data transfer
- RAM addressing and data transfer
- Real-time clock calibration
- Watchdog timer time-out and interrupt generation
- Network RAM addressing and data transfer
- Host primitive data loop and handshaking
- COM 9026 chip interrupt and status generation

The tests verify up to six MUX-5000 I/O controllers.

If an error occurs during any of the SYT tests, the SUS logs the error, displays it on the I/O display, and continues the start-up sequence.

DMSC (Mass Storage Controller Disk Tests)

The DMSC tests verify the disk functions of the Mass Storage Controller. The DMSC tests are the same as the DK5 tests and perform the following functions:

- Correctly completes on-board self-test diagnostics
- Generates all expected interrupts
- Writes format and writes data, and reads data correctly using the disk maintenance work
- Detects and corrects data errors across five bits
- Detects data errors across six or more bits

If an error occurs during any of the DMSC tests, the SUS logs the error, displays it on the I/O display, and continues the start-up sequence.

SCS (SCSI Disk/Tape Subsystem Tests)

The SCS tests verify up to two SCSI adapters (SCS0 and SCS1). These tests currently operate on two different types of SCSI adapters.

The first type is a differential SCSI host adapter that is in the Multibus and is connected to an external SCSI disk/tape subsystem.

The second type is an open collector SCSI adapter that is also in the Multibus, but this adapter controls SCSI disk/tape devices in the same cabinet as the Multibus (internal subsystem).

The SCS tests verify that these adapters properly perform the following functions:

- The controller registers and the on-board buffer accepts and holds all valid data patterns.
- DMA data transfers terminate correctly.
- Data relocation is performed correctly.
- Generates all expected interrupts.
- Data is written and read correctly (maintenance track only for disk devices).
- The error check logic detects bit dropouts and corrects those dropout errors (up to 11 bits).

If an error occurs during any of the SCS tests, the SUS reports the error, records it in the log, and continues the start-up sequence. The "Error Codes" section describes all of the errors that the SCS diagnostic detects.

STP (Streaming Tape Tests)

The STP diagnostic tests verify that the Streaming Tape Controller and the tape controller portion of the Mass Storage Controller performs the following functions:

- Gives the correct response to the RESET control signal and the read status instruction
- Generates all expected interrupts
- Verifies address counters and registers accept and hold all valid data patterns
- Changes all internal data lines from zero to one and from one to zero
- Certifies that all external data lines accept data from the internal data lines

If an error occurs during any of the STP tests, the SUS logs the error, reports it to the I/O display, and continues the start-up sequence.

MPA (6-2-1 Sync/Async Controller)

The MPA diagnostic tests are disk resident tests called and loaded by a SUS loader routine to verify that the Multi-Protocol performs the following functions:

- The command register reset bit generates a ROM checksum test and a RAM test.
- The following registers accept and hold all valid data patterns:

— Output register
— Input register
— Interrupt register

- The output data flag sets and resets correctly.
- The four least-significant bits of the Command register accept and hold all valid instruction bytes.
- Start of day initialization parameters are transferred.
- All expected interrupts are generated.
- LIM status errors that are reported by the MPA on-board firmware start-up tests are detected. The MPA firmware performs the following LIM tests:

  — DMA transfer test
  — USART integrity test
  — LIM data turnaround test
  — LIM control test
  — LIM timer test

Note: *The MPA diagnostic tests also verify the proper operation of the RS-232-C communication channels of the communication controller.*

If an error occurs during any of the MPA tests, the SUS logs the error, reports it on the I/O display as an MPA error, and continues the start-up sequence.

Note: *Because the MPA diagnostic is not ROM resident and the SUS must load the MPA diagnostic from the load device, the SSLS may report some errors associated with loading the diagnostic. Some of these errors terminate the start-up sequence. If a problem prevents loading of the MPA diagnostic, the SUS displays error code* `$058x` *and switches to the interactive mode (displays the* `SELECT START UP FUNCTION` *menu).*

Reporting Start-Up Errors

The SUS uses the following methods to report errors:

- Main unit front panel indicators (LEDs)
- Processor Memory Controller (PMC) module status indicators (LEDs)
- System error log (stored in a reserved area of system memory)
- Start-up diagnostics error reports displayed on the I/O device

This subsection contains a complete section to describe each of these methods.

The SUS handles system critical and system degraded errors in the ways described in the following subsections.

System Critical Hardware Errors

When a system critical hardware error occurs, the SUS performs the following six steps:

1. Sets the PMC module status indicators to a defined error configuration

2. Logs an error record in the system error log (unless the error occurs before the start-up sequence establishes the error log)

3. Displays an error report on the I/O device

4. Turns on the front panel FAULT indicator

5. Terminates the start-up sequence and switches to the interactive (manual) mode

6. Displays the `SELECT START UP FUNCTION` menu

System Degraded Errors

When a system degraded error occurs during start-up, the SUS performs steps 1 through 3 of the previous list and continues the start-up sequence.

The following subsections describe how the SUS provides error information.

Front Panel Indicators

The main unit front panel has five LED indicators that provide operation status and error information. There is also an indicator on each floppy disk and streaming tape present. The following subsections describe the function of each indicator. Figures 1-18 and 1-19 illustrate the front panel indicators.

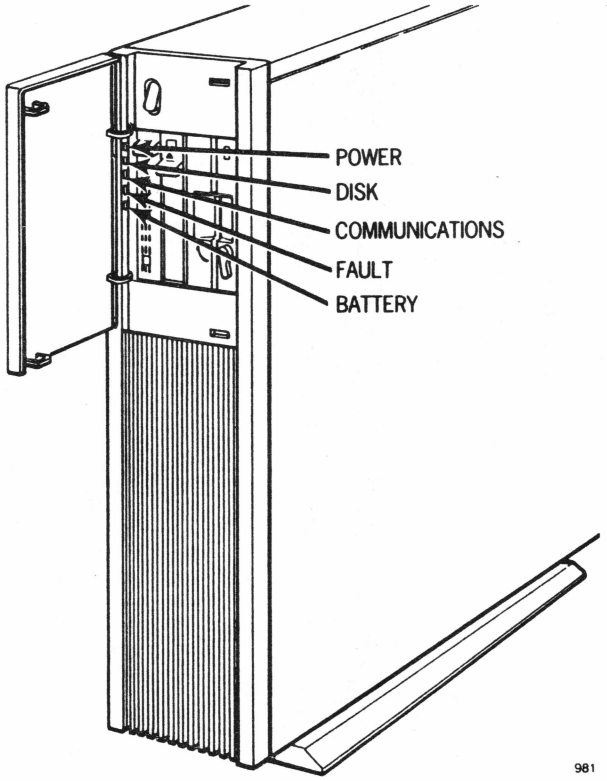

Figure 1-18. U 5000/30 and U 5000/35 Unit Front Panel Indicators

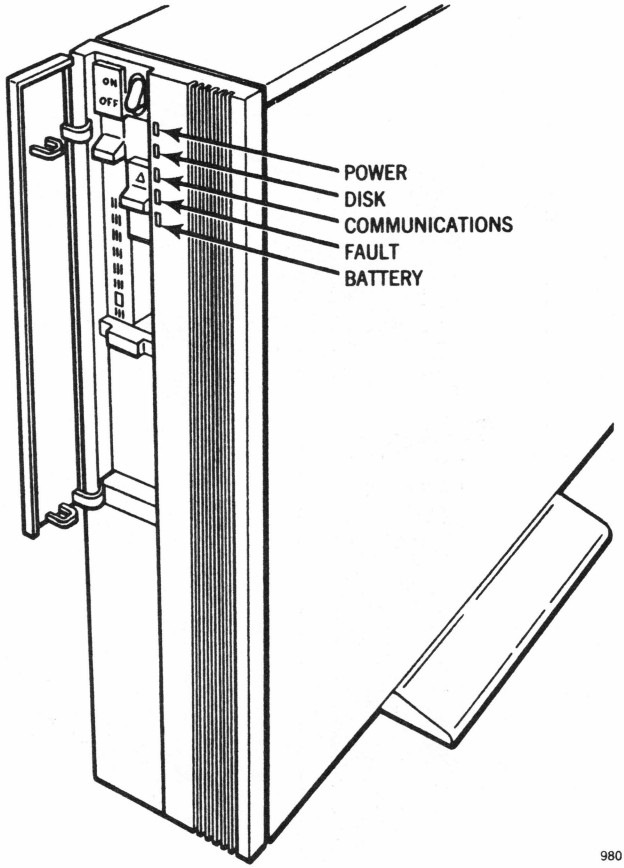

Figure 1-19. U 5000/50 and U 5000/55 Unit Front Panel Indicators

Power Indicator

When the indicator shows green, DC voltages are within tolerance. When the indicator is red, DC voltages are out of tolerance and must be corrected.

Disk

The disk controller board turns on the green DISK indicator to indicate that a Winchester disk drive is active.

Communications

The RS-232-C communication controller and/or the application software turns on the green COMMUNICATIONS indicator to indicate that communications polling is being performed.

Fault

The operating system software and the SUS firmware control the state of the FAULT indicator. The red FAULT indicator is off until a system critical hardware error occurs or until the file system is nearly full. A system critical hardware error is a hardware error that prevents system operation from continuing. When the operating system or SUS sets this indicator on in response to a critical hardware error all processing stops. The operating system sets the FAULT indicator on when the following conditions occur:

- The kernel detects that a disk has become 90 percent full.
- The fsck routine fails while the system is going from single-user to multiuser mode.

The full disk condition does not halt processing. Depending on the operating system release being used, however, this condition may flash the indicator on and off, or it may leave it on continuously.

When the fsck failure is detected, the indicator is turned on to show continuously and processing stops.

The "Examine Error Log" subsection in the section called "Error Codes" may provide information about the error that turned the indicator on.

Battery

The Memory Support System controls the operation of the BATTERY status indicator. This indicator has three states: off, on continuously, or flashing on and off.

When the BATTERY indicator is off, the Memory Support System is functioning properly and there are no problems with its operation.

When the BATTERY indicator is flashing on and off, the Memory Support System is charging the power cell (battery) at a high rate. When the power cell accepts a full charge, the charging rate decreases and if no other problems occur, the indicator stops flashing and remains off.

When the BATTERY indicator is on continuously, there is a fault in the Memory Support System, such as an open connection or no AC voltage to the power cell. In this condition, the power cell is not capable of maintaining the contents of system memory if the unit is turned off or if a power failure occurs.

Floppy Disk

The indicator that is just to the upper right of the floppy disk door is on when the floppy disk drive is active. (This indicator is red on some models, green on others.) Do not open the door or remove a floppy disk when this indicator is on.

Streaming Tape

The indicator (red or green) just to the lower left of the streaming tape drive door latch is on when the streaming tape drive is selected and ready, or when the drive is selected and active. Do not open the latch or remove the tape cartridge when this indicator is on.

On some systems, this indicator has three states as follows:

- Off - meaning the drive has no power, or is being reset.
- On (dim) - indicating the drive has power, the tape in the drive is at BOT, and the controller is sampling the drive status.
- On (bright) - signifying the drive has power and the tape is not at BOT.

Note: *Removing the tape cartridge while the activity indicator is on may cause loss of data.*

PMC Module Status Indicators (LEDs)

The four red status indicators (DS1-DS4) on the Processor Memory Controller (PMC) module identify errors that are detected by the start-up diagnostics. You must remove the top cabinet panel to see the PMC status indicator LEDs.

Table 1-5 shows the status indicator configurations and describes the meaning of each configuration. Remember, if all of these indicators are off, the last start-up diagnostic sequence terminated successfully.

System Error Log (Memory)

The system error log is an accumulation of error records that are stored in a reserved area of system memory (RAM). The individual diagnostics test programs generate the error records, the error log driver (a ROM routine) combines the error records and stores them in the log, and the SUS test supervisor (a ROM routine) displays the contents of the error log on the diagnostic I/O devices.

Different errors generate different types of error records, and all error records do not contain the same fields; however, error records for specific types of errors must contain specific fields. Figure 1-20 identifies the maximum number of fields that may be included in an error record and also shows the required optional fields. All error records contain an `Error Code 1` field. This manual identifies errors according to the numeric value of the `Error Code 1` field and the `Logtask` name. When trying to find the cause of any specific start-up error, refer to the "Start-Up Error Codes" subsection of the "Error Codes" section.

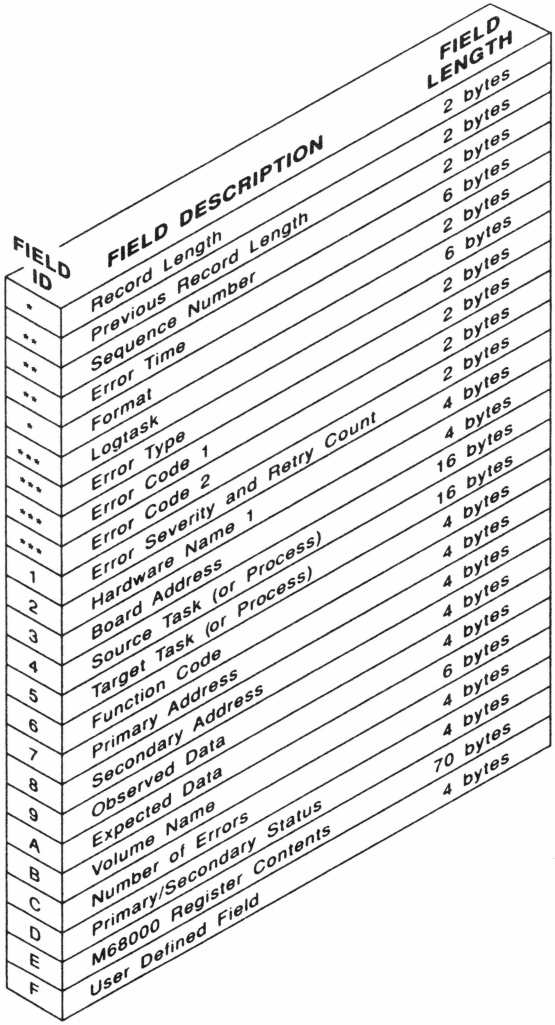

*Required in all error records (no Field ID)
**Inserted in all error records by the error log drive (no FIELD ID)
***Required in all error records (no FIELD ID)

NOTE: Fields 1 - F are optional and are not in all error records. C1040

Figure 1-20. Error Record Files

Error Record Fields

The following subsections describe each field that may be included in SUS error records.

Record Length

The RECORD LENGTH field contains a two-byte hexadecimal value that identifies the length of this error record. The most significant byte must be zero and the least significant byte must be an even value. This is the first field in all error records.

The record length field is not part of the SUS error reports. It is available only by accessing the system log area of reserved memory.

Previous Record Length

The PREVIOUS RECORD LENGTH field is a two-byte, two's complement number that, when added to the record length field of this error record, provides the start address of the previous error record in the error log.

If the value of this field is zero, there is no previous error record. This is the second field in all error records.

The PREVIOUS RECORD LENGTH field is not part of the SUS error reports; it is available only by accessing the system log area of reserved memory.

Sequence Number

The SEQUENCE NUMBER field is a two-byte hexadecimal value that identifies the number of errors that were recorded before this error. This field is set to zero at start-up time and each error event increments the number by one.

The diagnostic supervisor module translates and displays this value (in the SUS error reports) as a decimal number. This is the third field in all SUS error records.

Error Time

The error time is a six-byte field that contains the date and time stamp that the error log driver reads from the Time-Of-Day clock chip. If the error occurs before the TOD clock is initialized, each byte of the error time field is set to FF. If the error occurs after the TOD clock is initialized, the ERROR TIME field contains the time of the error. The time is reported in Greenwich Mean Time (GMT).

The ERROR TIME field is the fourth field in all error records.

Format

The FORMAT field is a two-byte field that identifies the format of this specific error record. If the error record is generated in the SUS error record format, the FORMAT field contains the value XX01.

The FORMAT field is the fifth field in all error records.

Logtask

The LOGTASK field is a six-byte field that identifies the processor (or task) that generated the error record.

The LOGTASK field contains two parts: a four-byte name, and a two-byte ID value.

The four-byte name is assigned by the software developer. The following are examples of names that are associated with specific Unisys software modules:

- SSXX-ROM resident SUS routines
- XXXO-ROM resident start-up diagnostics programs
- XXX1-Media resident in-service diagnostics programs
- XXX2-Media resident in-service diagnostics programs
- XXDV-Operating system software driver programs

In previous examples, the Xs represent alphanumeric characters that identify unique subroutines or programs within the specified level of software.

The second part of the LOGTASK field (the two-byte ID value) permits the user to determine the difference between two tasks that have the same four-byte task (or process) name. The operating system assigns this two-byte hexadecimal ID value. Valid values are from 0 to 7530. Software modules that are not proper (true) operating system processes are assigned an ID value of zero. All SUS diagnostics programs are assigned an ID value of zero.

Type Of Error

The TYPE OF ERROR field contains a two-byte hexadecimal value that provides a general description of the type of error that is being reported.

In the SUS error reports, the start-up diagnostics display routines translate the hexadecimal values into the English word that is associated with that value. The following list shows the hexadecimal value (from memory) and the English words (from the display) that identify the types of errors:

- HARDWARE (0001)
- OPERATOR (0002)
- MEDIA (0003)
- SOFTWARE (0004)
- THRESHOLD (0005)
- NON-ERROR EVENT (0006)
- COMMUNICATION DEVICE (0007)

Error Code 1

The ERROR CODE 1 field is a two-byte hexadecimal value that identifies the error. Each Error Code 1 value that is generated by a start-up diagnostic program has a unique value that is not repeated by any other diagnostic; however, Error Code 1 values that are generated by other software modules may not be unique.

To know the meaning of any Error Code 1 value, be sure to know the LOGTASK name that is associated with the Error Code value 1.

Non-error events that are recorded in the error log use this field as the primary event code.

Error Code 2

The ERROR CODE 2 field is a two-byte hexadecimal value that provides additional information about the error. The meaning of all Error Code 2 values is determined by the LOGTASK and Error Code 1 values in this same error record.

The ERROR CODE 2 field is set to zero if it has no specific meaning for this error.

Note: *The following fields are not required in all SUS error records. These fields contain two parts. The first part is a two-byte hexadecimal ID code that identifies the type of field. The second part is a value. The length and interpretation of the value depends on the type of field.*

Error Severity/Retry Count

The ERROR SEVERITY/RETRY count field contains a two-byte ID code of 01, and a two-byte hexadecimal value that indicates how this error influences the operation of the system. The error severity byte of this field contains one of the three following values, and the retry count field identifies the number of times that the software tried the failing operation. In the SUS error reports, the start-up diagnostics display routines translate the hexadecimal values (shown in parentheses) into the English word(s) (shown in uppercase letters) that is associated with that value:

- SOFT error (01)
- HARD, DEGRADED error (02)
- HARD, CRITICAL error (03)

SOFT indicates that an error occurred, but the operation was successful after the software tried that operation one or more additional times. HARD indicates that the operation was not successful after some specified number of tries, or that because of the type of error, it was not useful to try the operation again. DEGRADED indicates that the system had an error, but that some function(s) can still be performed. CRITICAL indicates that the failure prevents the system from being used and that processing must stop.

Hardware Name 1

The HARDWARE NAME 1 field contains a two-byte ID code of 02, and the four-byte ASCII name of the hardware element that is the most usual cause of this error. For media errors, this field identifies the device on which the bad media is installed.

Refer to the "Diagnostic Hardware Names" subsection of this section for more information about the hardware name conventions that the SUS uses.

Board Address

The BOARD ADDRESS field contains a two-byte ID code of 03, and the four-byte hexadecimal value of the base address of the controller that is associated with the failing device. Using this field together with the HARDWARE NAME 1 field, permits the SUS to identify both the failing device and the controller to which it is connected. If necessary, use the EXAMINE SYSTEM CONFIGURATION routine to find the hardware name of the controller that is strapped to this address.

Source Task

The SOURCE TASK field contains a two-byte ID code of 04, and a 16-byte value that identifies the process that is causing or starting an action. The first 14 characters in the value identify a filename that is associated with the process and the last two bytes contain the process ID number that is assigned by the operating system.

Target Task

The TARGET TASK field contains a two-byte ID code of 05, and a 16-byte value that identifies the process that is receiving or accepting the result of the operation. The first 14 characters in the

value identify a filename that is associated with the target process and the last two bytes contain the process ID number that is assigned by the operating system.

Function Code

The FUNCTION CODE field contains a two-byte ID code of 06, and a four-byte hexadecimal code that identifies the function that failed. For hardware errors, this code is usually a hardware element function code or a firmware function code. For media and software errors, this code is usually a software instruction code, a directive code, or a select code.

Address 1

The ADDRESS 1 (primary address) field contains a two-byte ID code of 07, and a four-byte memory, disk, or I/O address. This field is used to identify the start address of a range of addresses or the first of multiple error addresses.

Address 2

The ADDRESS 2 (secondary address) field contains a two-byte ID code of 08, and a four-byte memory, disk, or I/O address. This field is used to identify the end address or a range of addresses or to identify the size of a range of addresses.

Observed Data

The OBSERVED DATA field contains a two-byte ID code of 09, and a four-byte value that represents a byte, word, or longword of data that was returned or observed by the operation that failed. Usually the observed data should be compared to the EXPECTED DATA field.

Expected Data

The EXPECTED DATA field contains a two-byte ID code of OA, and a four-byte value that represents a byte, word, or longword of data that was the expected result of the operation that failed. Usually the EXPECTED DATA should be compared to the OBSERVED DATA field.

Volname

The file pack name contains a two-byte ID code of OB, and a six-byte ASCII name that identifies the media that was being accessed when the error occurred.

Number Of Errors

The NUMBER OF ERRORS field contains a two-byte ID code of OC, and a four-byte hexadecimal number that identifies the number of times that this same type of error has occurred. This field is used primarily to help identify threshold errors.

Primary/Secondary Status

The PRIMARY/SECONDARY STATUS field contains a two-byte ID code of OD, and a four-byte value that identifies the primary (two left-most bytes) and secondary (two right-most bytes) hardware element of software instruction status code.

Register List

The REGISTER LIST field contains a two-byte ID code of OE, and a 70-byte value that represents the contents of the M68000 registers. The 70-byte value is arranged in the following sequence:

- Program Counter (PC) contains 5 four bytes.
- Supervisor Register (SR) contains 5 two bytes.
- D0-D7 Data Registers contains 5 four bytes each.
- A0-A7 Address Registers contains 5 four bytes each.

User Defined

The USER DEFINED field contains a two-byte ID code of OF, and a four-byte value that provides any information that cannot be described in any of the previously listed error record fields.

The start-up diagnostics programs use this field to identify the number of times that this test loop has been performed.

Start-Up Diagnostic Error Reports

Start-up diagnostic error reports contain part or all of the same information as the system error log records, depending on when the error occurred during the start-up sequence. If the start-up sequence has advanced to the point of establishing the error log when an error occurs, the diagnostic generates an error record, the error log driver puts that record in the error log, and the test supervisor displays part of that record on the I/O device.

If the error occurs before the start-up sequence establishes the error log, the SUS displays the complete error record on the I/O device.

Although each different error report may contain different fields, all error reports are displayed in the same format.

If information is needed about any of the fields displayed in the error reports, refer to the "Error Record Fields" subsection of this section. Figure 1-21 is an example of an error report that the memory diagnostic generated to identify a hardware failure (memory address line failure).

```
LOOP 1
FAILURE COUNT 0
TEST: IVT TOD EDC MMU MEM
LOGTASK = MEM0,0
ERROR CODE 1 = $4102
```

Figure 1-21. Hardware Failure Error Report (Manual Test)

Note: *The top three lines of this display are not part of the error report. They identify activity that occurred before the error was detected.*

Figure 1-22 is an example of an error report that the SUS generated to identify an operator error (usually a typographical error).

```
LOGTASK = SSDL,0
TYPE OF ERROR = OPERATOR
ERROR CODE 1 = $0586
ERROR CODE 2 = $0000
ERROR SEVERITY = HARD, DEGRADED RETRY = 0
HARDWARE NAME1 = f501
ADDRESS 1 = $00000000
```

Figure 1-22. Operator Failure Error Report

Figure 1-23 is an example of a system critical hardware failure that occurred during an automatic start-up sequence. In this example, the MPA diagnostic program requires a file that cannot be loaded from the load device.

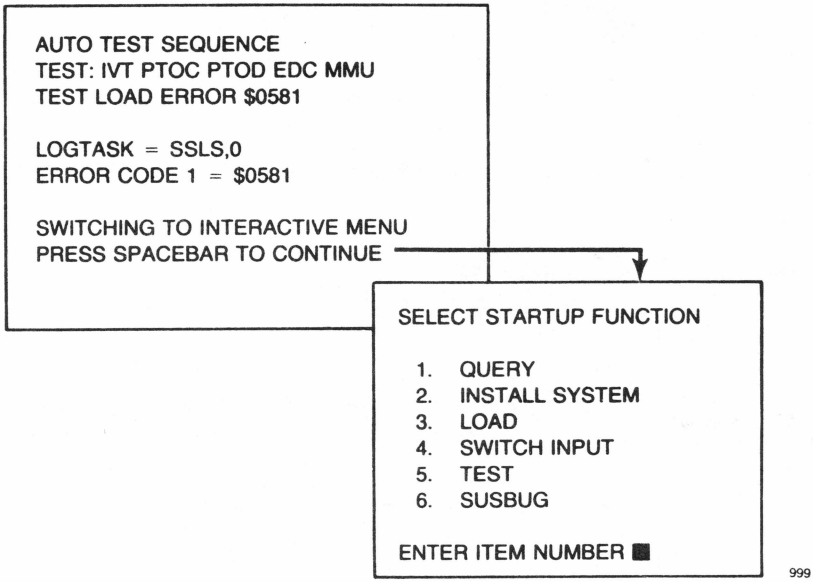

Figure 1-23. Automatic Start-Up CRITICAL Error (Example)

Error Codes

Each start-up diagnostic program generates its own unique error codes. Most diagnostics generate two error codes: Error Code 1 and Error Code 2. Some diagnostic error reports also contain status code(s).

In addition to these two error codes, you must also consider the LOGTASK or DIAGNAME field and any other error information in the error report when using the error report to find the cause of the error.

The following list provides a key to the values that occur in the SUS ERROR CODE 1 field. This list does not try to identify the complete cause of the error, but it does identify the diagnostic program or software module that detected the error during start-up.

- 00xx SSIN (SUS Interrupt handler/unexpected interrupts)
- 01xx SKE (SUS Kernel)
- 02xx ISL7 (UNIX Intermediate System Loader)
- 03xx Reserved
- 04xx Reserved
- 05xx SSLS (SUS Load Supervisor)
- 06xx SSST (Streaming Tape loader)
- 07xx Reserved
- 08xx Reserved
- 09xx Reserved
- 0Axx Reserved
- 0Bxx Reserved
- 0Cxx Reserved
- 0Dxx Reserved
- 0Exx Reserved
- 0Fxx Reserved
- 10xx Reserved
- 1xxx EDC0 (Error Detect/Correct level-0 diagnostics)
- 2xxx TOD0 (Time-Of-Day Clock level-0 diagnostics)
- 3xxx IVT0 (Interval Timer level-0 diagnostics)
- 4xxx MEM0 (System Memory/PMC Cache Memory level-0 diagnostics)
- 5xxx MMU0 (Memory Management Unit level-0 diagostics)
- 7xxx DK50 (5.25-Inch Disk level-0 diagnostics)
- 8xxx Reserved
- 9xxx MPA0 (6-2-1 sync/async controller level-0 diagnostics)
- Axxx STPO (Streaming Tape level-0 diagnostics)

- Bxxx CPC0 (Communication/Peripheral Controller level-0 diagnostics)
- Cxxx H1O0 (High Performance 8-Channel I/O Controller level-0 diagnostics)
- Dxxx SCSD (Small Computer System Interface disk/tape subsystem level-0 diagnostics)
- Exxx FPPD (Floating-Point Processor level-0 diagnostics)
- Fxxx Reserved

Section 2
In-Service Diagnostics

Overview 2-1
Definition of In-Service Diagnostics 2-1
How to Perform In-Service Diagnostics 2-2
Using the Diagnostics Menu 2-3
Selecting Device Tests 2-6
Sample Device Tests Screen 2-7
Procedure for Selecting Device Tests 2-8
Selecting System Tests 2-16
Reporting Tests Results 2-19
Test Report Screen (Native Tests) 2-20
Test Results (Comm, TTY, Printer, and Modem Tests) 2-30
Error Message Area 2-33
Selecting Tallies 2-34
Displaying Communication Tallies 2-35
Clearing Communication Tallies 2-36
Setting Communication Tally Thresholds 2-36
Selecting Data Capture 2-37
Data Capture (Native Devices) 2-38
Data Capture (Communication Links/Devices) 2-42
Selecting Error Log 2-47
Error Log Parameters 2-49
Performing Modem Equalization Tests 2-52
Test Descriptions 2-52
Non-SCSI Flexible Disk Tests 2-52
SCSI Flexible Disk Tests 2-54
Non-SCSI Disk Tests 2-56
SCSI Disk Tests 2-58
Non-SCSI Tape Tests 2-60

SCSI Tape Tests 2-62
Parallel Printer Tests 2-65
tty and Communication Device Tests 2-66

Section 2
In-Service Diagnostics

Overview

This section tells how to select and use the in-service (level 2) diagnostic tests and how to interpret the results of these tests, which are part of the operating system (OS) software. It also provides descriptions of the tests available.

The menu selections and descriptions in this section apply to the in-service diagnostic tests that are part of the U 5000/30/35/50/55 Release 3.00.01 operating system based on UNIX. This section refers to this OS as Release 3.00.01.

Definition of In-Service Diagnostics

In-service diagnostics are test programs that permit you to test system resources at the same time the system is performing normal system operations. In-service diagnostics are often referred to as level 2 diagnostics.

In-service diagnostic testing is part of and operates under the control of the operating system (OS) software; therefore, the OS must be installed and operating properly before you can perform in-service diagnostic testing.

In-service testing does not interfere with other user/system functions, and is performed in the multiuser mode much like a typical user process.

Figure 2-1 shows the **Diagnostics** tasks you may perform.

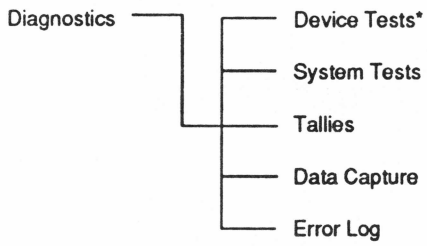

Figure 2-1. Diagnostics Tasks

* Use the **Device Tests** selection to perform modem (equalization) tests on Release 3.00.01.

How to Perform In-Service Diagnostics

To perform in-service diagnostic testing, you should be at a `login:` request.

The typical in-service diagnostic user login name is **maint**. This name is reserved for use by trained personnel for in-service diagnostic maintenance only. The system accepts only lowercase letters for the **maint** login name. Also, the system permits only one user at a time to log in as **maint**.

Note: *In order to protect the security of your system, it is important to immediately give* ***maint*** *a password.*

Figure 2-2 shows the screen as it is displayed after a successful login. Note that **Diagnostics** is highlighted. Press < **cr** > to begin performing the in-service diagnostic functions.

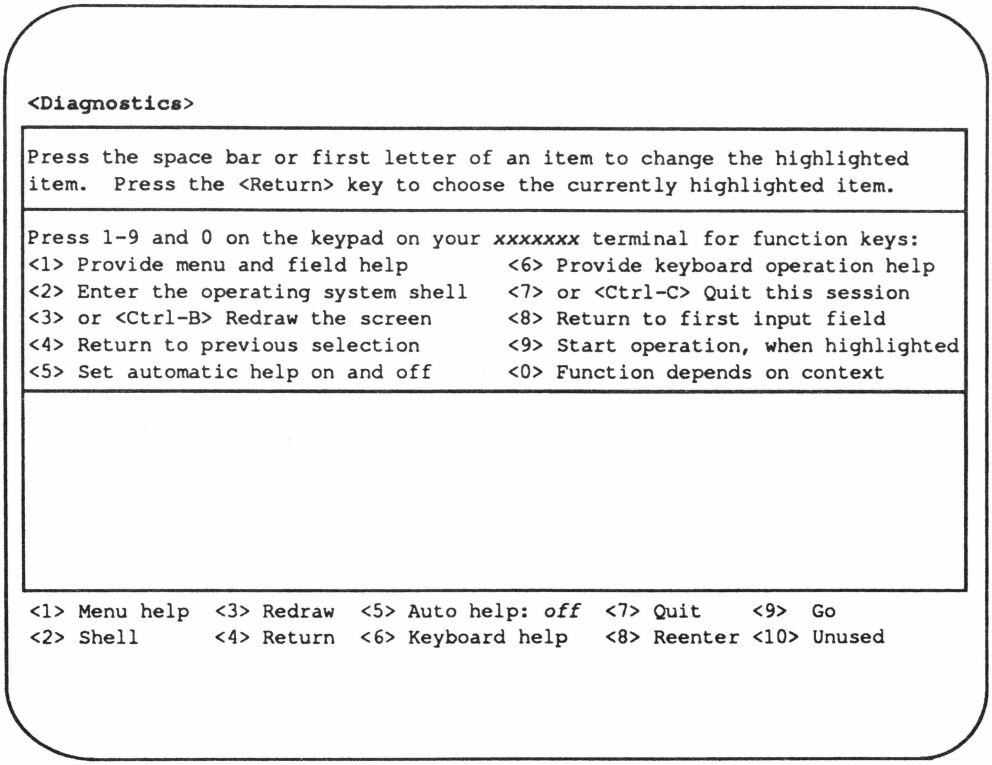

Figure 2-2. maint Login Display

Using the Diagnostics Menu

Following is a description of the function key actions. Use keys 1 through 9 and 0 on the keypad only for function keys 1 through 10. If your terminal does not have a keypad, you may not have access to full diagnostic functionality.

<1> Menu help	Provides menu and field help.
<2> Shell	Allows the user to enter the operating system shell. (< **Ctrl** > **d** returns to the < **Diagnostics** > screen.)

<3> Redraw	Redraws the screen.
<4> Return	Returns to previous menu.
<5> Auto help	Sets automatic help on and off.
<6> Keyboard help	Provides relevant keyboard operation help.
<7> Quit	Quits the session.
<8> Reenter	Returns to first input field.
<9> Go	Starts operation (only works when highlighted).
<10> End Sel/Unused	Function depends on context. Press 0 on the keypad to activate. (This function does not always appear.)

Figure 2-3 shows the **Diagnostics** functions available.

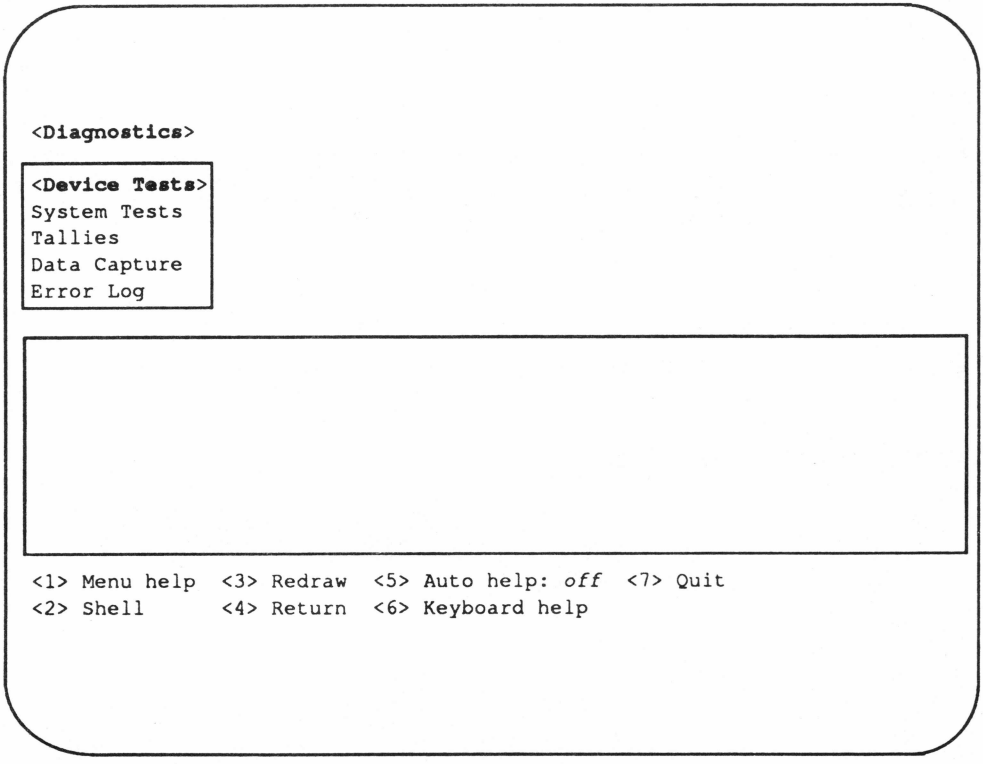

Figure 2-3. Diagnostics Functions Menu

Press < **spacebar** > to move the "highlight" to the desired selection item, and then press < **cr** > to select that function. You may use the keypad key (or function key if so equipped) <5> to toggle on the automatic help function, or press <6> to display relevant keyboard help information. Press the <1> key to display help information about the highlighted selection.

This section describes each of the **Diagnostics** functions and identifies the additional selections that you must make to perform each function.

The following list identifies the function of each of the available items on the **Diagnostics** menu:

- **Device Tests** — Lets you test any specific device in the system.
- **System Tests** — Lets you perform a previously defined set of non-destructive tests that verify the operation of devices currently in the system.
- **Tallies** — Lets you perform tally functions associated with monitoring the performance of communication devices. However, before you can perform tally functions, you must select the type of devices on which the functions are to be performed: **Native**, **Communication**, or **Other**. The tally functions available are as follows.
  - — Display or clear tallies - Display or clear accumulated totals (tallies) of events and errors that occur as a result of operations performed by devices in the system.
  - — Set thresholds - Set the threshold limit (percentage of errors to total operations) that generates error records for specific device tallies.
  - — Set interval - Set the interval of time for which tallies are monitored to see if the percentage of errors exceeds the established limit (threshold).

- **Data Capture** — Lets you record (capture) and/or display data that is transferred to/from tty, PMC tty, or parallel printer devices or across a communication link.

  Before you can perform the following data capture functions, you must identify whether the functions are to be performed on **Native**, **Communication**, or **Other** devices.

  — Start - Activate the process of capturing data on a specified link.

  — Stop - Terminate any currently active data capture process.

  — Check - Identify all currently active data capture processes.

  — Process Files - Convert previously captured "raw" data into an easy-to-read file and then display and/or print that data.

  — Remove Files - Remove data capture files from the system after they have been examined.

- **Error Log** — Lets you display, clear, and/or print the accumulation of error events (and some non-error events) that have occurred since the log was last cleared.

Selecting Device Tests

Select **Device Tests** from the **Diagnostics** menu to perform one or more diagnostic tests associated with a specific disk, tape, tty, or printer device.

Note: *Depending on the speed of your machine, this process may take a few seconds.*

After selecting **Device Tests**, you must make the following entries or selections in the **Device Tests** and **Test Selection** windows before the test can start.

- Device name - designation for type of device to be tested
- Test group - depends on the device name entered
- Test(s) to be performed - depends on the device name entered
- Log errors - yes/no choice
- Continue on error - yes/no choice
- Loop count - number of times test is to be performed
- Change test parameters - yes/no choice

If you need more detailed information about the **Device Tests** and **Test Selection** windows, read the following subsections before making the Go selection.

Sample Device Tests Screen

Figure 2-4 is an example of a typical screen displayed when **Device Tests** is selected. The values shown in the < > (angle bracket) symbols in this figure are only examples and do not represent the exact values required to perform any specific function.

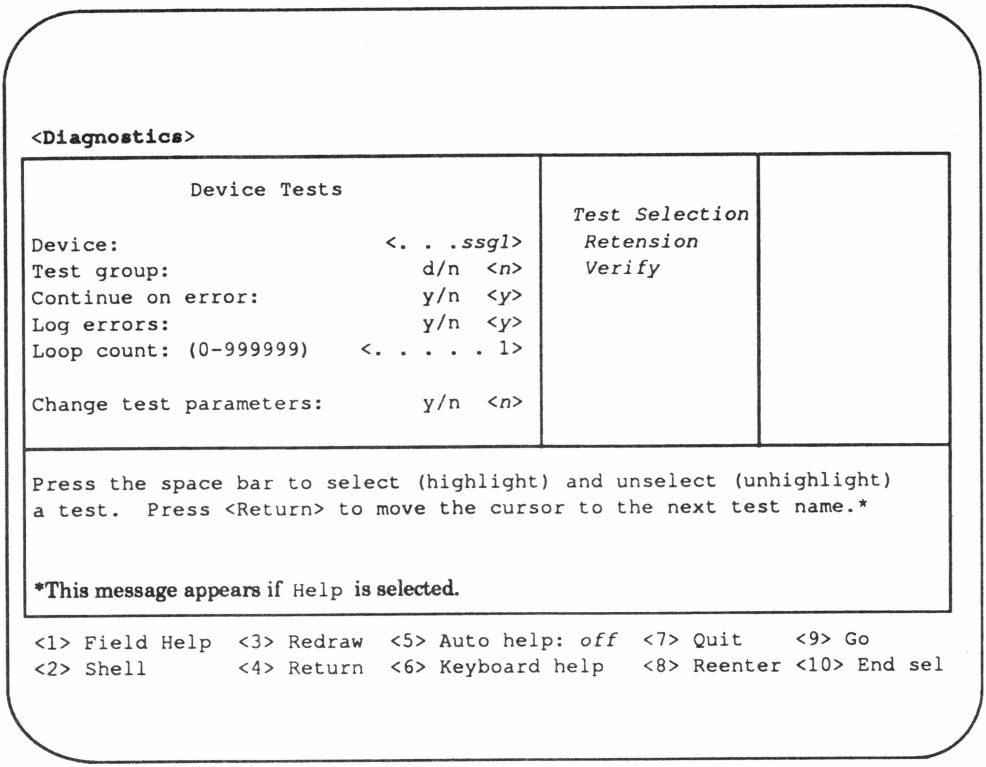

Figure 2-4. Device Tests Screen (Example)

When testing communication links/devices, the **Device Tests** screen is not exactly the same as the example.

Procedure for Selecting Device Tests

Complete the following steps to supply all the information needed in the **Device Tests** and **Test Selection** windows of the display.

1. Enter the name of the device to be tested.

- With the cursor initially positioned at the **Device** field, select **<1> Field help** to display a listing of all configured devices. A list of potential configured devices can be found in Table 2-1.

- Enter the listed designation for the device you wish to test. Press **< cr >** to advance the cursor to the next field.

- The system does not accept any invalid names.

Table 2-1. Configured Devices Listing

Device	Name
Main Unit Flexible Disk	
Internal non-SCSI	f5*01*
Internal SCSI	sfd1
Main Unit Fixed Disk	
Internal Winchester/ST506 type	h5*01*, or h5*02*
Internal SCSI Disk	sda1 or sdb1
Main Unit Streaming Tape	
Internal non-SCSI	st*xx*
Internal SCSI	ssg1 or ssf1
Terminals	tty*xx*, ttya, or ttyb
Printers	
Serial	tty*xx*
Parallel	pp*xx*
SCSI External Disk/Tape Subsystem	
Streaming Tape/Magnetic Tape	ss[4, 5, *or* 6]1
Fixed Disk	sd[0, 1, 2, *or* 3]*x*
2780/3780 Bisync Communication Link	bt01 - bt03
3270 Bisync Communication Link	bm01 - bm03
High-level Data Link Control	hd01 - hd03

2. Indicate the test group you are going to use.

   - If the previously named device is associated with only one test group, the system automatically sets the parameter to select that group.

   - Not all tests permit the selection of all test groups. The test group identifiers that are valid for the device specified are automatically listed. With the cursor at the **Test group** selection, enter one of these valid test group identifiers. Table 2-2 lists possible test group identifiers.

Table 2-2. Valid Group Identifiers

Device Tests	Group ID
Non-destructive disk, tape, or printer tests	n
Data destructive disk or tape tests	d*
Tests that are unique to either tty or pp	u
Tests that are common to tty, pp, bm, bt, and hd communication links/devices	c
TTY device loop 3 test	t*
TTY device loop 1 test	l
Modem tests	m
MPCC board tests	b

* Refer to Cautions that follows.

Caution

Performing "destructive" diagnostic tests can destroy valuable disk or tape data files. You may or may not be able to recover this data once you activate these destructive tests.

Caution

Care should be taken when running the TTY device loop 3 test on the console port. The loop 3 test temporarily changes /etc/inittab to turn off the port it is testing.

- After you enter the test group identifier, the system moves the cursor to the **`Test Selection`** window.

3. Select the tests that you want to perform.

   - The **`Test Selection`** window automatically displays a list of tests that are associated with the device selected. The diagnostics will assume that any highlighted test in the test window is the default unless you physically type in the group identifier. Refer to the "Test Descriptions" subsection for a complete description of each test available for each device. Table 2-3 shows the test names organized by test group for each device type.

Table 2-3. Test Names/Test Groups

Device Tests			
Type of Device	Test Group		
	c (Common)	n (Non-destructive)	d (Destructive)
Non-SCSI Flexible Disk: f5*01*		Self Restore Seek Read Data Wrt/Rd Maint	
SCSI Flexible Disk: sf*d1*		Identify Unit Self Wrt/Rd Buff Seek Verify	Wrt/Rd Ptrn Wrt/Rd Rndm Format Media
Non-SCSI Disk: h5*xx*		Self Restore Seek Read Data Wrt/Rd Maint ECC	
SCSI Disk: sd*xx*		Unit Self Restore Seek Verify Wrt/Rd Maint Inquiry Flaw List	
Non-SCSI Tape: st*xx*		Turnaround Retension	Wrt/Rd Data Wrt/Rd FM Erase
SCSI Tape: ss*xx*		Retension Verify	Wrt/Rd Data Wrt/Rd FM Write Files Erase End of Media
Parallel Printer: sd*xx*		Form Feed Line Feed Pattern	

Table 2-3. Test Names/Test Groups (cont.)

tty and Modem Tests				
Type of Device	**Test Group**			
	m (Modem Tests)	**u (Unique)**	**t (tty Loop 3)**	**l (tty Loop 1)**
tty devices: tty00-95	Mark Space Pattern	Terminal	Loop 3	Loop 1
PMC tty devices: ttya-ttyb	Mark Space Pattern	Terminal	Loop 3	
Serial Printer tty00-95		Terminal		
Modems	Mark Space Pattern			

Communication Tests			
Type of Device	**Test Group**		
	l (bm/bt)	**h (hd)**	**b (Board Tests)**
MPCC Board MPC*x*			FW-Version Status-short Status-long Reset-uncond Reset-cond
Bisync/Secondary bm*xx*/bt*xx*	Loop 1 Loop 2 Loop 3 Loop 4 Modem-status	Loop 1 Loop 2 Loop 3 Loop 4 Modem-status Ping Pong	
DLC/Primary hd*xx*		Loop 1 Loop 2 Loop 3 Loop 4 Modem-status Ping Pong	

- The system enters the **Test Selection** window by positioning the cursor at the first test name listed. To select the test at the cursor location, press < **spacebar** >. The system highlights the test name, indicating the test is selected.

- Pressing < **spacebar** > a second time removes the highlight and indicates that the test is no longer selected. Remember this toggle effect of < **spacebar** > in the test selection process.

- Press < **cr** > to move the cursor to the next test name in the list. Repeat the action with the < **spacebar** > and < **cr** > until you have selected (i.e., highlighted) all of the desired tests.

- After highlighting all desired tests, select **End Sel**. (On Unisys keyboards, **End Sel** is 0 on the keypad.) This exits the **Test Selection** window and returns the cursor to the **Continue on error** selection in the **Device Tests** window.

4. Indicate whether you want the testing to continue if an error occurs.

   - The system automatically sets this parameter to **y** for yes, assuming you want the testing to continue even if an error occurs. Press < **cr** > if you wish to verify this default setting.

   - Enter **n** for no if you want test to stop when an error occurs, then press < **cr** >.

5. Indicate whether you want to log any errors in the system error log.

   - The system automatically sets this parameter to **y**, assuming you want to log any errors that occur. Press **< cr >** if you wish to verify this default setting.

   - Enter **n** if you do not want to log errors that may occur, then press **< cr >**.

6. Enter the number of times you want the test to be performed.

   - This parameter is automatically set to **1**, indicating by default that the system is going to perform the test(s) only one time. Press **< cr >** to verify this default.

   - If you want the test(s) performed more than once, enter the desired number of times (from **2** to **999999**), then press **< cr >**.

   - If you want the test(s) to perform until you stop the process by pressing **< Ctrl > c**, then enter **0** and press **< cr >**.

7. Indicate whether you want to change the default test parameters.

   - The system automatically sets this parameter to n, which means that the system selects preset values that are to be used during specific tests. (In order to view test parameter options, select **y**.) If the **n** selection is satisfactory for this test session, select Go to start the test(s).

- If this selection is not satisfactory, enter the letter **y** to indicate that you want to change the test parameter values of each test selected. When the system starts a test, the changed parameter information may be requested if required. Change the parameter information as required at this time.

- Select **Go** to start the test(s) if you are satisfied with what you have selected. You can enter **< Ctrl > c** to cancel the test(s), once begun.

- When the test starts, the test results are displayed on one of the following types of screens:

  — Test Report screen - When performing native (peripheral) device tests (Figure 2-6)

  — Test Results window of the Device Tests screen - When performing communication link/device tests (Figure 2-10)

  See the "Reporting Test Results" subsection.

Selecting System Tests

Select **System Tests** from the **Diagnostics** menu to perform a set of established tests that verify the operation of the disk and tape devices that are currently configured in the system.

Table 2-4 shows the set of tests performed for currently configured devices.

Table 2-4. System Tests Performed

Device	System Tests
st*xx*	Turnaround Retension
h5*xx*	Self Restore Wrt/Rd Maint ECC
f5*01*	Self Restore Seek Wrt/Rd Maint
ss*xx*	Verify Retension
sd*xx*	Unit Self Restore Seek Wrt/Rd Maint
sf*d1*	Unit Self Wrt/Rd Buff

Figure 2-5 shows the **System Tests** screen.

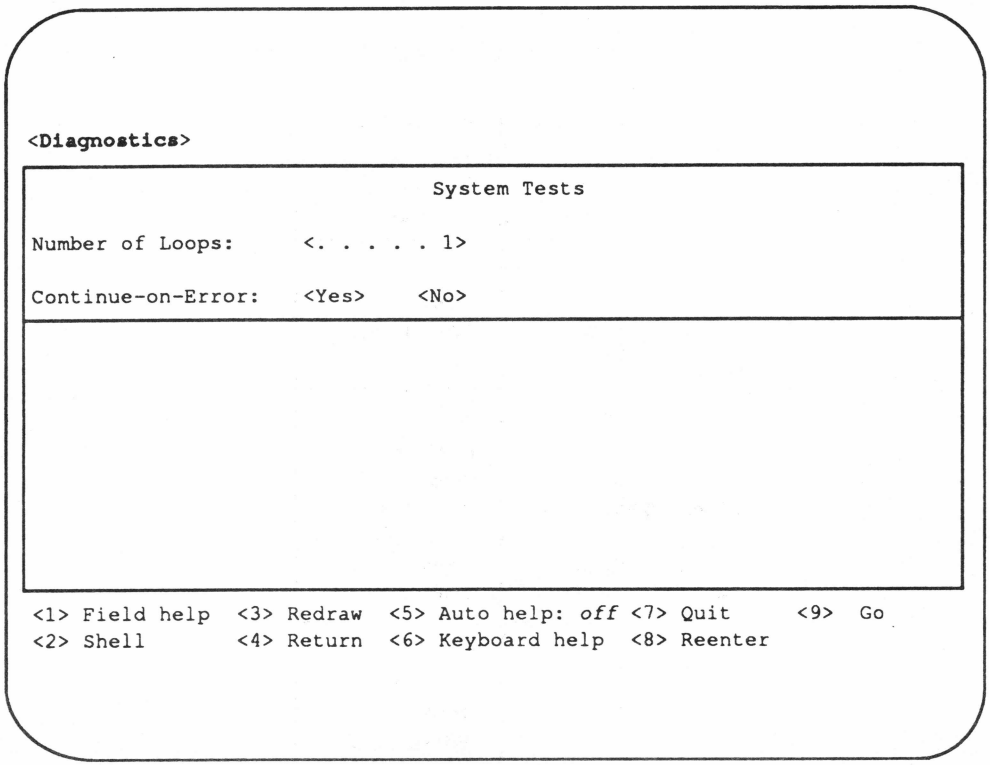

Figure 2-5. System Test Display

When the system displays the screen shown in Figure 2-5, perform the following steps to activate the system tests.

1. Determine whether parameter defaults are satisfactory.

   - If the default parameter settings of 1 for **Number of Loops** and No for **Continue-on-Error** are satisfactory, select Go.

- Select **Field help** if you need more information before deciding.

- To change a parameter, proceed as follows.

2. Enter the number of times to perform the test.

   - The cursor is initially positioned at **Number of Loops**. Enter a number between **1** and **999999**, indicating the number of times the system tests are to be performed.

   - If you want to perform the test until you press the **< Ctrl > c** key combination, enter **0** (zero).

   - Press **< cr >** to advance the cursor to **Continue-on-Error**.

3. Change the **Continue-on-Error** setting.

   - Press **< spacebar >** to highlight the **Yes** selection.

   - Press **< cr >** to make the **Yes** selection, indicating you want system tests to continue if an error occurs.

4. When both **System Tests** parameters are correct, select **Go** to begin the system tests.

Reporting Test Results

The in-service diagnostics system uses the following screens to display test results:

- Test Report screen - When performing native (peripheral) device tests. See Figure 2-6.

- Test Results window of the Device Test screen - When performing communication link/device tests. See Figure 2-10.

Test Report Screen (Native Tests)

The in-service diagnostics system uses the Test Report screen to display the results of a native test sequence.

Release 3.00.01 uses this screen to display only disk and tape results. The **Test Results** window of the **Device Tests** screen is used to display tty, printer, and modem results.

The terminal displays the report immediately after a test sequence starts.

Figure 2-6 is an example of the Test Report screen. This figure is an example only and does not explain any specific test condition or sequence.

The Test Report remains on the terminal screen until you press < **cr** > in response to the following prompt:

```
Press < Return > to continue
```

The report is divided into three major areas as follows:

- Test Configuration window
- Current Test Information window
- Error Report and Messages

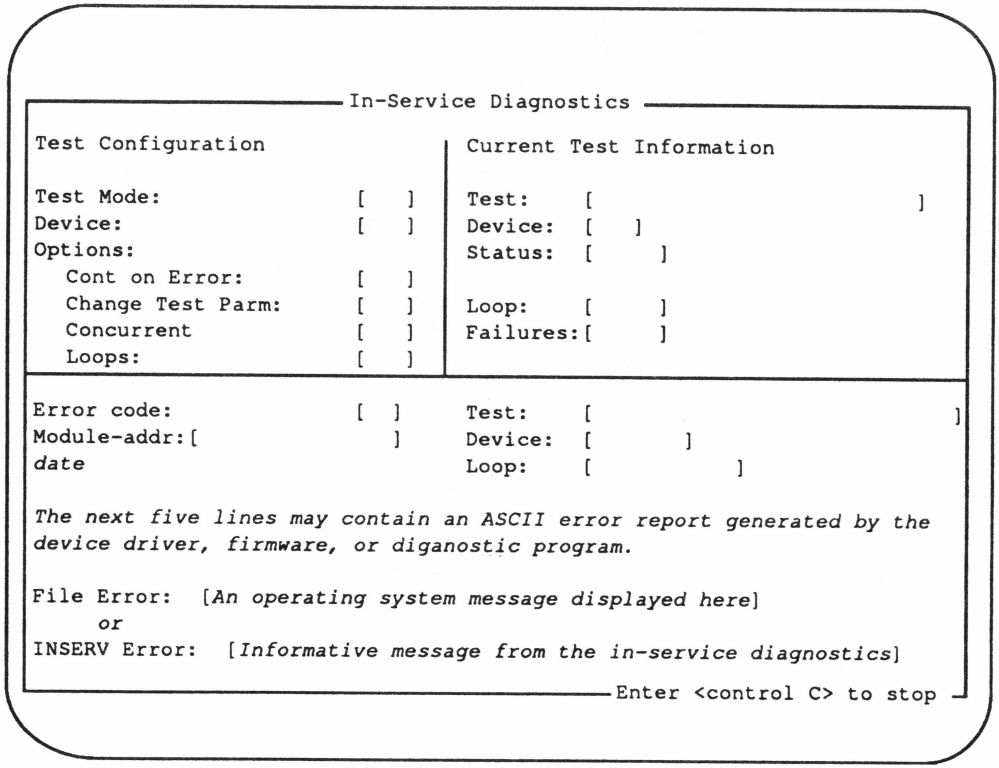

Figure 2-6. Test Report Screen for Native Tests (Example)

The following subsections describe the function of each area of the Test Report and identify the type of information that may be displayed in each field within these areas.

Test Configuration Window

The **Test Configuration** window of the Test Report identifies the mode of testing, the devices being tested, and the setting of the diagnostic test options.

Following is a description of the information displayed in each field of the **Test Configuration** window.

Test Mode

The **Test Mode** field indicates whether the mode of testing is to test a single device or to perform a system test.

The field contains one of the following identifiers, depending on whether **Device Tests** or **System Tests** was previously selected.

- [single] - if **Device Tests** was selected
- [system] - if **System Tests** was selected

Device

The **Device** field identifies the standard hardware name for the device being tested. See Table 2-1 for a listing of standard names for configured devices.

Options

The **Options** field has four subfields:

- Cont on Error
- Change Test Parm
- Concurrent
- Loops

The subfields describe the settings of the diagnostic test options. The **Log errors** option setting from the **Device Tests** window (Figure 2-4) is not displayed because errors are always logged.

The **Cont on Error** and **Change Test Parm** option fields display yes if the option is set or no if the option is turned off.

The **Concurrent** option field is always set to no. This option is not part of the **Device Tests** window (see Figure 2-4).

The **Loops** option field displays a number from 000000 to 999999 that represents the number of loops to be performed in this test sequence. If the **Loops** option value is set to 000000, the system repeats the test continuously until **< Ctrl > c** is entered.

Current Test Information Window

The **Current Test Information** window of the Test Report provides information about the test that is currently being processed.

Following is a description of each field in the current test information area.

Test

The **Test** field identifies the name of the test currently being processed.

The test names are the same as the test names listed in Table 2-3 and explained in the "Test Descriptions" subsection.

Device

The **Device** field identifies the standard hardware name of the device currently being tested.

The device names are the same as the device names shown when selecting **Device Tests** and when making the **Field help** selection.

Status

The **Status** field indicates the status of the test currently being run.

Valid entries in the **Status** field are:

- [passed]
- [failed]
- [skipped]
- [running]

Loop

The **Loop** field identifies the number of the test loop currently being processed. The system increments this number by one each time the test or test sequence is completed. Depending on the time required to perform the test or test sequence, this value may be incremented very quickly.

Failures

The **Failures** field identifies the total number of errors that have occurred. The errors identified may have been caused by hardware, software, or media, as well as by the operator.

Because one loop performs all of the selected tests one time, the displayed loop count may not be the same as the displayed failure count.

Error Report and Messages Area

The error report and messages area of the Test Report provides information about any error that occurs during the test.

Although the example Test Report screen (Figure 2-6) provides an accurate representation of error report format, it is not an example of any specific error report.

Following is a description of each field in the error report and messages area.

Error code

The **Error code** field is a four-character (two-byte) hexadecimal value that identifies the cause of the error. Each diagnostic generates its own unique error code values.

For descriptions of all in-service diagnostics error codes, refer to the "Error Codes" section of this manual.

Module-addr

The **Module-addr** field identifies the type of module that was being tested when the error occurred and also the hexadecimal base address of the controller associated with the tested module. This field does not identify the specific device or the specific module. (Multiple modules of the same type may be present.)

Typical names that are displayed in the module field are:

- [PMC] - For the Processor Memory Controller errors
- [5 in disk] - For 5.25-inch Disk Controller or the Winchester or flexible disk drives connected to that controller
- [stream tape] - For the Streaming Tape Controller or streaming tape drive errors
- [SCSI] - For the Small Computer System Interface peripheral subsystem errors

Date

This field displays the date and time of the current test failure.

Test

The **Test** field identifies the name of the test that failed. For a description of the function of the failing test, refer to the "Test Descriptions" subsection later in this section.

Device

The **Device** field identifies the standard hardware name of the device that failed.

Loop

The **Loop** field identifies the number of the test loop that was being processed when the error occurred.

Error Messages

In addition, the error report and messages area of the Test Report screen contains one or more lines of message information that help describe device errors.

Actual run-time error reports may contain more or less information than the following examples.

Streaming Tape Errors (Except SCSI)

The following example represents the fields in a typical streaming tape test error report.

```
Function:   [                ]
     Error:   [                ]
     Block Number:   [                ]   Block Offset:   [           ]
     Expected Data:   [                ]
     Observed Data:   [                ]
```

Disk Errors (Except SCSI)

The following example represents the fields in a typical disk peripheral error report. Depending on the cause of the error, the error report section of this screen may contain more or fewer fields than the example shown here.

```
Error:   [              ]
     Command = [ ] Status = [              ]
     Head =  [ ]  Sector =  [ ]
     Cylinder =   [          ]  Block =  [           ]
     Some error reports contain a message here
     File Error:   [              ]
          or
     INSERV Error: [              ]
```

SCSI Interface Errors

SCSI subsystem diagnostics use the following screen displays to report in-service diagnostic errors associated with SCSI device errors.

- Basic error report (displayed automatically); see Figure 2-7
- Possible cause report (operator activated if displayed); see Figure 2-8
- Hexadecimal (hex) translation report (operator activated if displayed); see Figure 2-9

SCSI device error reports are displayed in the error report and messages area of the standard Test Report screen.

The basic error analysis report (for a fixed disk error) appears similar to Figure 2-7.

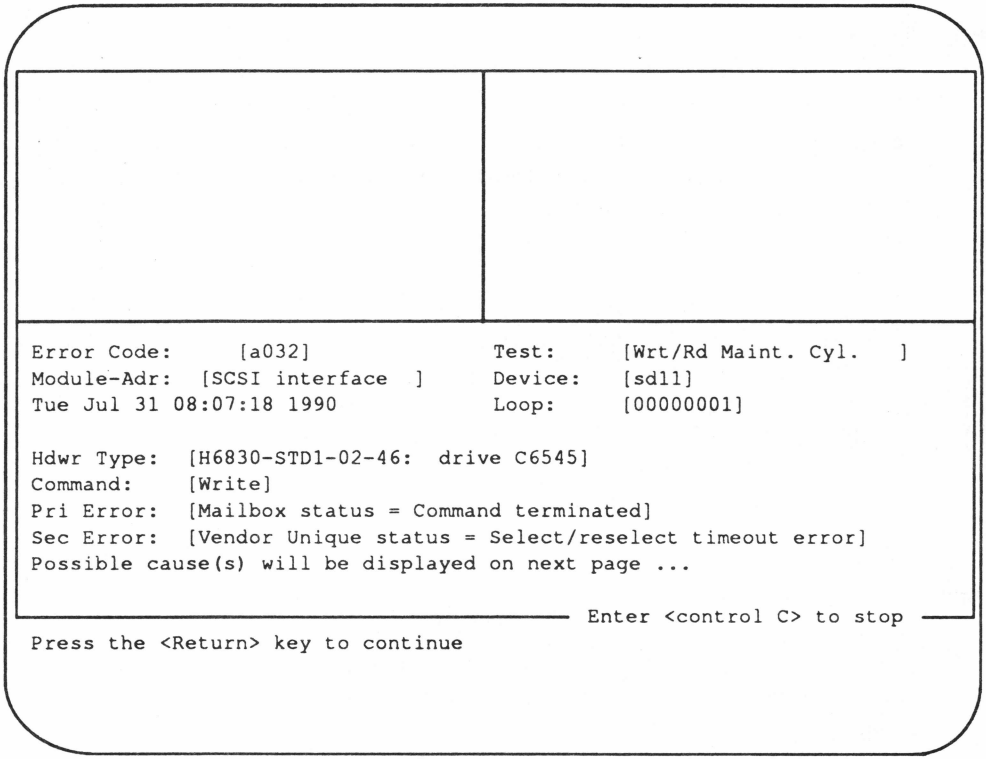

Figure 2-7. Basic Error Analysis Report for a Fixed Disk Error (Example)

When you press < **cr** >, the SCSI diagnostic system displays possible cause information, as in Figure 2-8.

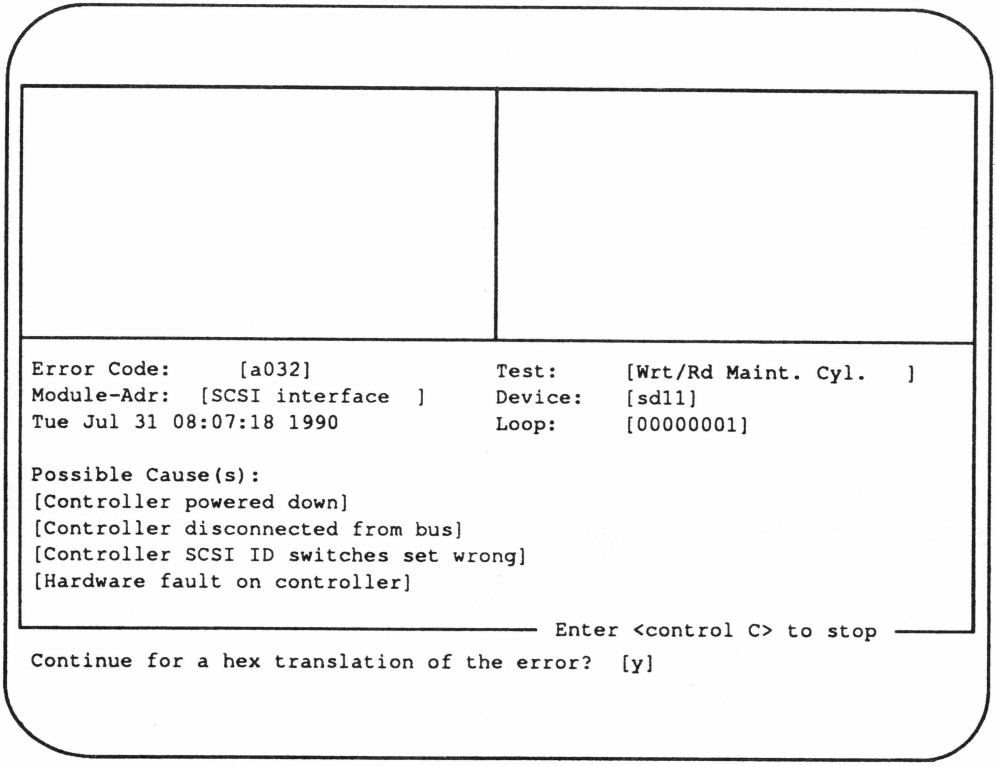

Figure 2-8. Possible Cause Information for a Fixed Disk Error (Example)

When you enter y, a hex translation error report for a fixed disk error, similar to the one shown in Figure 2-9, is displayed.

```
Error Code:      [a204]                Test:      [Wrt/Rd Maint. Cyl.     ]
Module-Adr:  [SCSI interface  ]        Device:    [sd11]
Tue Jul 31 08:07:18 1990               Loop:      [00000001]

CDB = 08 0000 B0 10 00 00 00 00 00 00
Sensekey - 02 Not Ready
Sense data  F0 00 02 00 00 00 B0 0E
00 00 00 00 04 00 00 00 00 00 00 00 00 00 00 00 00 00 00 00 00 00
00 00 00 00 04 00 00 00 00 00 00 00 00 00 00 00 00 00 00 00 00 00
Sec EC [0x04] Drive not ready

                                       Enter <control C> to stop
Press the <Return> key to continue.
```

Figure 2-9. Hex Translation Error Report for a Fixed Disk Error (Example)

Test Results (Comm, TTY, Printer, and Modem Tests)

Figure 2-10 shows the windows of the diagnostic test screen as it appears after a comm, tty, printer, or modem test sequence has been entered. This subsection describes the **Test Results** window and error message area of the display.

In Figure 2-10, the values shown in the <> (angle bracket) symbols are only examples of what you might enter and do not represent the exact values required to perform any specific function. This report was created by performing a Loop 3 test without installing a turn-around test connector.

```
<Diagnostics>

            Device Tests                  | Test Selection |    Test Results

Device:                      <tty00..>    |   Loop 3       |
Test group                m/t/l/u  <t>    |                |
Continue on error             y/n  <y>    |                | Device:     <tty00.>
Log errors:                   y/n  <y>    |                | Test:  <Loop3.....>
Loop count: (0-999999)       <..... 1>    |                | Status:       <Fail>
                                          |                | Loop:       <000001>
Change test parameters:       y/n  <n>    |                |
                                          |                | Failures:    <00001>

                                   Test: <....Loop3>
Device:                            Loop: <000001>
Tue Oct 2 16:48:46 MDT 1990

Turnaround plug has not been installed or is not functioning properly.
```

Figure 2-10. Screen with Comm, tty, Printer, or Modem Test Results Display

8X0f

The Streaming Tape Controller failed to generate a required interrupt within the allotted time.

8X10

The Streaming Tape drive returned an unexpected End Of File status.

8X11

The Streaming Tape Controller returned an Invalid Command status.

8X12

The device name specifies a Streaming Tape Controller that is not installed in the system. This is an operator error.

8Xf0

A soft error occurred during the tape operation. Retries were required or underruns occurred.

8Xf1

The data pattern that was received from the Streaming Tape Controller is not the same data pattern that was sent to the controller.

Failures

The **Failures** field displays the total number of tests that have failed since the last time Go was selected.

Notes: *When it is necessary for the In-Service Diagnostics to modify /etc/inittab in order to stop activity on a TTY port being tested, the original inittab is saved in the file /etc/inittab.diag. After testing is completed, the original inittab is restored and the file /etc/inittab.diag is removed. If, for any reason, the diagnostic session should terminate abnormally the existance of the file /etc/inittab.diag is an indication that the original inittab may not have been restored. This problem can be serious if the port being tested was the console port. To correct the problem, copy /etc/inittab.diag to /etc/inittab and execute the command:* ***init q****.*

If there are no active terminals (for example, power failure occurs while testing the console port) you will be unable to restore the inittab. In this case, refer to the "System Installation, Restore, and Maintenance Phase 2" subsection of the "Installing System Software" section in the Software Installation Guide.

Error Message Area

The communication diagnostics activates the error message area at the bottom of the test screen when a selected test fails, when a condition prevents the test from starting, or when it wants status information when no failure occurs. Following is a description of the information displayed in the fields of the error message area of the display.

Error

The **Error** field displays a short description of the cause of the error. The following list shows examples of typical error descriptions that may be displayed in this field.

- [Data Mismatch]
- [Receive Error]
- [Unit Not Ready]
- [Media Error]
- [Invalid Instruction]

Data

For specific types of errors, the data fields display additional information about the failure. Depending on the type of device being tested, and the type of error that occurred, this field may display the following type(s) of data. The system identifies the type of data being displayed.

- Expected and Observed Data
- Received Data and Transmitted Data
- Transmit Status and Receive Status
- Modem Status

Selecting Tallies

Figure 2-11 shows the tasks available when selecting **Tallies** from the **Diagnostics** menu. In general, select **Tallies** to perform the display, clear, and/or set functions associated with the communication links/devices.

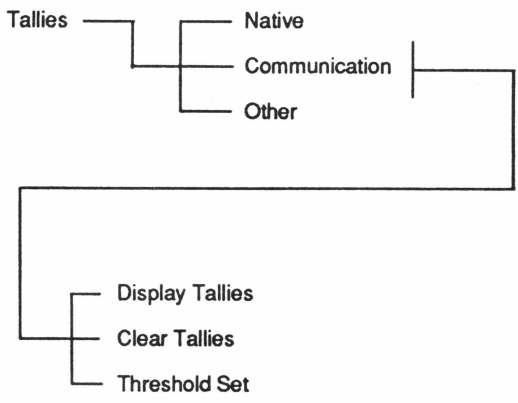

Figure 2-11. Tallies (Communication) Menu Selections

The **Native** selection for performing tally functions on tty, PMC tty, and parallel printer devices is not currently supported. Select **Communication** from the **Tallies** menu to perform tally functions on communication links/devices; then select the desired display, clear, or set function. Select **Other** from the **Tallies** menu to perform any tally functions that may be available with user installed applications, programs, or hardware.

You may perform the following tally functions for communication devices.

- Display the current tally values (counts)
- Clear the current tally values (counts)
- Set the percentage for tally error logging thresholds

The OS tallies monitor the performance level of the communication links and peripheral devices. Knowing how to interpret the meaning of the tally values and tally thresholds (percentages) requires specific technical knowledge of, and experience with, the communication links and the peripheral devices.

This manual provides information about how to access the tallies and how to perform various tally functions, but it is not a tutorial about how to interpret the meanings of the individual tallies or the acceptability of their values (counts).

The following subsections describe the operations you may use to clear and display the communication and peripheral tallies and to set the tally thresholds.

Displaying Communication Tallies

This `Display Tallies` menu selection permits you to display communication link tallies. Before the tallies are displayed, perform the following tasks as required.

1. Select **Field help** for a listing of configured communication devices such as the following:

   ```
   bt00    bt01    bm20
   ```

   The listing for your system displays only those communication devices that have been configured into your system.

2. At the **Device type (device name prefix)** field, enter the name of the device whose tallies you want to display.

Clearing Communication Tallies

The **Clear Tallies** menu selection permits you to clear the tallies that have accumulated for a specific communication link/device. At the **Device type** field, enter the name of the communication link/device whose tallies you wish to clear. If necessary, select **Field help** for a listing of the communication links/devices that are configured on your system.

Setting Communication Tally Thresholds

The **Threshold Set** menu selection permits you to set thresholds for the first time or to change existing thresholds that have already been set, for each of the configured communication links/devices. The following subsections explain the field entries required in order to set communication tally thresholds.

Device Type to Set

Enter the name of each communication link/device whose tally threshold you wish to set. Select **Field help** as required for a complete listing of all communication links/devices configured on your system.

Tally ID to Change

Enter the tally identification number of the tally whose threshold you wish to change. You may change all or only one of the tally IDs. After accessing the field, select **Field help** for a listing of the tally IDs that are available for you to change.

Tally Threshold Value

Enter a number between **0.00** and **1.00** for the new threshold value. The value you are entering is a percent value. For example, entering **.01** sets the threshold values to 1 percent; therefore, if the tally value (count) for the selected tally **ID** reaches 1 percent of the total number of operations associated with this device, a tally threshold exception is recorded (logged) in the error log.

Entering the threshold value of **0.00** means that no tally threshold exceptions will be recorded (logged) in the error log regardless of the value of the tally ID, and thus disables the thresholding facility.

Selecting Data Capture

When you select **Data Capture** from the **Diagnostics** menu, the following selections are displayed:

- Native
- Communication
- Other

Select **Native** from the **Data Capture** menu to perform data capture functions on tty, PMC tty, and/or parallel printer devices. Select **Communication** to perform data capture functions on communication links/devices. Select **Other** to perform any data capture functions that may be available with user installed applications, programs, or hardware.

Data Capture (Native Devices)

Selecting **Native** from the **Data Capture** menu displays data capture functions associated with native (tty, PMC tty, or parallel printer) devices of the system, as listed in Table 2-5.

Table 2-5. Data Capture (Native) Functions

Function	Description
Start	Activate the process of capturing all data, transmitted data, or received data for a specified device.
Stop	Stop the capture of data for a specified device.
Check	Display a list of active data capture processes, their process IDs, and the names of their devices and files.
Process Files	Format and display a previously captured data file.
Remove Files	Remove a specified data capture file from the /datacap directory.

The following subsections describe the available data capture functions as they may be performed on native devices.

Starting Data Capture

The **Start** data capture function captures and stores data that is transmitted and/or received on the specified native communication link. The function stores the raw captured data in a disk file to be used later to help determine the accuracy level of the link. Although the data capture process may decrease overall system performance, it provides a valuable maintenance benefit. Use the **Process Files** data capture function to access the captured data.

If data capture is performed on a high-speed or a high-volume link, the process creates a very large data capture file in a very short time. Use the **Remove Files** function to prevent the data capture files from using excessive operating system file space.

Following is a description of the fields displayed when **Start** is selected from the **Native** menu, including information on entries and/or selections to be made. Default field selections are highlighted on the screen.

Port Name

Enter the name of the port (**tt*xx*, pt*xx*, pp*xx***) on which you wish to start capturing data. (Select **Field help** for information about available port names.)

Data Filename

Enter the name of the data file that is to contain the raw captured data. This file becomes part of the **/datacap** directory.

Stopping Data Capture

The **Stop** data capture function permits you to terminate any active data capture process for a specified native link. When **Stop** is selected from the **Native** menu, enter the name of the device associated with the native data capture process that you want to terminate.

Checking Data Capture Processes

The **Check** data capture function checks data capture status, displaying the following information about each currently active native data capture process:

- Device name associated with the process
- Process ID number
- Data capture (raw) filename

Processing Data Capture Files

Select the **Process Files** data capture function to perform any of the following operations on captured data for native links.

- Create and save a formatted data capture file
- Display a formatted data capture file
- Print a formatted data capture file

Following is a description of the fields displayed when **Process Files** is selected from the **Native** menu, including information on selections or entries to be made. Default field selections are highlighted on the screen.

Data Filename

Enter the name of the raw data capture file that was specified when the data capture process was started. The names of all such "raw" files are in the **/datacap** directory. If you want to see this list, enter a non-existent filename and the function displays the list after < Go > is selected.

Processed Filename

Enter the name to be assigned to the formatted data capture file that is to be created by this process. Do not enter a name here if the file is to be printed.

Type of Data to Process

This field permits you to select the type of data to be formatted from the raw data capture file:

- `All` - Permits the formatting of all data, both received and transmitted
- `Input only` - Permits the formatting of only the received data
- `Output only` - Permits the formatting of only the transmitted data

Display Processed File

The `Yes` option in this field displays previously captured data in an easy-to-read format (not as raw data). The `No` option specifies that the previously captured data is not displayed.

Print Processed File

If this option is set to `yes` and no name has been entered in the **`Processed file name`** field, the function prints previously captured data to the system default printer. The default selection `No` specifies that the processed file is not to be printed.

Removing Data Capture Files

The **`Remove Files`** data capture function permits you to remove (delete) either raw or formatted native data capture files that are currently in the **/datacap** directory.

Data Capture (Communication Links/Devices)

Selecting `Communication` from the `Data Capture` menu displays functions associated with capturing (collecting) data transmitted and/or received across the system's communication links, as listed in Table 2-6.

Table 2-6. Data Capture (Communication) Functions

Function	Description
Start	Activate the process of capturing all data, transmitted data, or received data for a specified communication device.
Stop/Display	Stop the capture of data for a specified communication device and, optionally, display the captured data.
Display	Display a previously captured data file.
Status	Display a status of active data capture processes and a list of data capture files in the system.

The following subsections describe all of the available data capture functions.

Starting Data Capture

The `Start` data capture process captures and stores data that is transmitted and/or received on the specified communication link. The process stores the raw captured data in a disk file to be used later to help determine the accuracy level of the link. Although the data capture process causes some decrease in overall system performance, it provides a valuable maintenance benefit. Use the `Stop` data capture process to access the captured data.

If the data capture process is performed on a high-speed link or on a high-volume link, the process creates a very large data capture file in a very short time. To prevent the data capture files from using excessive operating system file space, use the delete files option within **Stop** data capture selection.

Following are the fields displayed when **Start** is selected from the **Communication** menu. Default field selections are highlighted on the screen.

Device Name

Enter the device name of the communication link on which you wish to start capturing data.

Capture Data Type

This selection permits you to determine the type of data that is to be captured:

- `All` - Permits the capture of all link data, both received and transmitted
- `Receive` - Permits the capture of only the data received
- `Transmit` - Permits the capture of only the transmitted data

Maximum Message Size to Be Captured

Enter the maximum message size of the data to be captured. Valid values you may enter are **00001** to **99999**. Data capture is truncated to the length specified.

Stopping/Displaying Data Capture

The Stop data capture process terminates any active data capture process for a specified communication link. In addition, Stop permits you optionally to display, save, or delete the data that has been captured. Make the appropriate entry or selection in the following fields to enable the Stop data capture functions. Default field selections are highlighted.

Device Name

Enter the device name of the communication device that you wish to stop capturing data.

Display Options

Select from among the following options:

- All - Displays all the captured data
- None - Stops data capture for the device specified without displaying anything
- Both errors and summary - Displays a summary of the number of messages captured and any errors that were detected, in addition to any blocks or frames tagged as errors
- Errors only - Displays only blocks or frames tagged as errors
- Summary only - Displays only a summary of the number of messages captured and errors detected

Save or Delete Files Option

You may select any of the following save or delete files options. All data capture files are found in the **/appl/comm.dir/MPCC** directory.

- `Save raw data` - Saves the raw data file with the name ***xxxx*dcap.raw**, where ***xxxx*** is the name of the specified device.

- `Save both raw and converted data` - Saves both the raw data capture file and the data capture file that has been converted for displaying. This option saves the raw data file with the name **/appl/comm.dir/MPCC/*xxxx*dcap.raw** and the converted data capture file as **/appl/comm.dir/MPCC/*xxxx*dcap.prf**, where ***xxxx*** is the name of the specified communication device.

- `Delete raw data` - Permits you to delete the raw data capture file.

- `Delete both raw and converted` - Permits you to delete both the raw data capture file and the data capture file that has been converted for displaying.

Minimum Message Size to Be Displayed

If the display option `All` was selected, enter the minimum message size to display. Valid values you may enter are **00001** to **99999.**

Displaying Data Capture Files

The **`Display`** data capture function permits you to display the data that has been captured for the specified communication link. It also permits you to save or delete the data that has been captured. Make entries or selections in the following fields for the **`Display`** menu selection. Default field selections are highlighted.

Enter Device Name

Enter the device name of the communication device that you wish to display captured data.

Display Options

Select from among the following options:

- `All` - Displays all the captured data
- `None` - Displays none of the captured data
- `Both errors and summary` - Displays a summary of the number of messages captured and any errors that were detected, in addition to any blocks or frames tagged as errors
- `Errors only` - Displays only blocks or frames tagged as errors
- `Summary only` - Displays only a summary of the number of messages captured and errors detected

Save or Delete Files Option

You may select any of the following save or delete files options. All data capture files are found in the **/appl/comm.dir/MPCC** directory.

- `Save raw data` - Saves the raw data file with the name **/appl/comm.dir/MPCC/*xxxx*dcap.raw**, where ***xxxx*** is the name of the specified device.

- `Save both raw and converted data` - Saves both the raw data capture file and the data capture file that has been converted for displaying. This option saves the raw data file with the name **/appl/comm.dir/MPCC/*xxxx*dcap.raw** and the converted data capture file as **/appl/comm.dir/MPCC/*xxxx*dcap.prf**, where ***xxxx*** is the name of the specified communication device.

- `Delete raw data` - Permits you to delete the raw data capture file.

- `Delete both raw and converted` - Permits you to delete both the raw data capture file and the data capture file that has been converted for displaying.

Minimum Message Size to Be Displayed

If the display option `All` was selected, enter the minimum message size to display. Valid values you may enter are **00001** to **99999**.

Checking Data Capture Status

The `Status` menu selection permits you to display data capture status. The following status information is displayed:

- Whether any active data capturing is being done
- Whether there are any raw data capture files that have been saved and the filenames
- Whether there are any converted (ASCII) data capture files that have been saved and the filenames

Selecting Error Log

The `Error Log` selection on the `Diagnostics` menu permits you to access the error log and to display and/or print the information stored in the system error log.

Note: *This section tells you how to access the error log from the* `Diagnostics` *menu and explains options that are available to you to use when displaying the contents of the error log. Detailed information about specific errors that may be in the error log is in the "Error Codes" section.*

Each error log entry is a 128-byte record that contains only the information which is related to a particular type of error. The error log may contain information about the following types of errors:

- Hardware errors
- Operator errors
- Software errors
- Threshold errors
- System start-up
- System shutdowns
- Power fail events (with BBU operating)
- System time changes
- Error logger start/stop

When you select **Error Log** from the **Diagnostics** menu, the system displays a screen containing an assumed value for each of several error report parameters. If these parameter values are satisfactory for your desired error report, just select **Go**.

If you want to examine the error log under some different conditions, or if you need more information about the assumed values of these parameters, select **Field help** or read the subsections that describe the selection fields on the **Error Log** screen.

Figure 2-12 shows the error log parameter display after **Error Log** is selected from the **Diagnostics** menu.

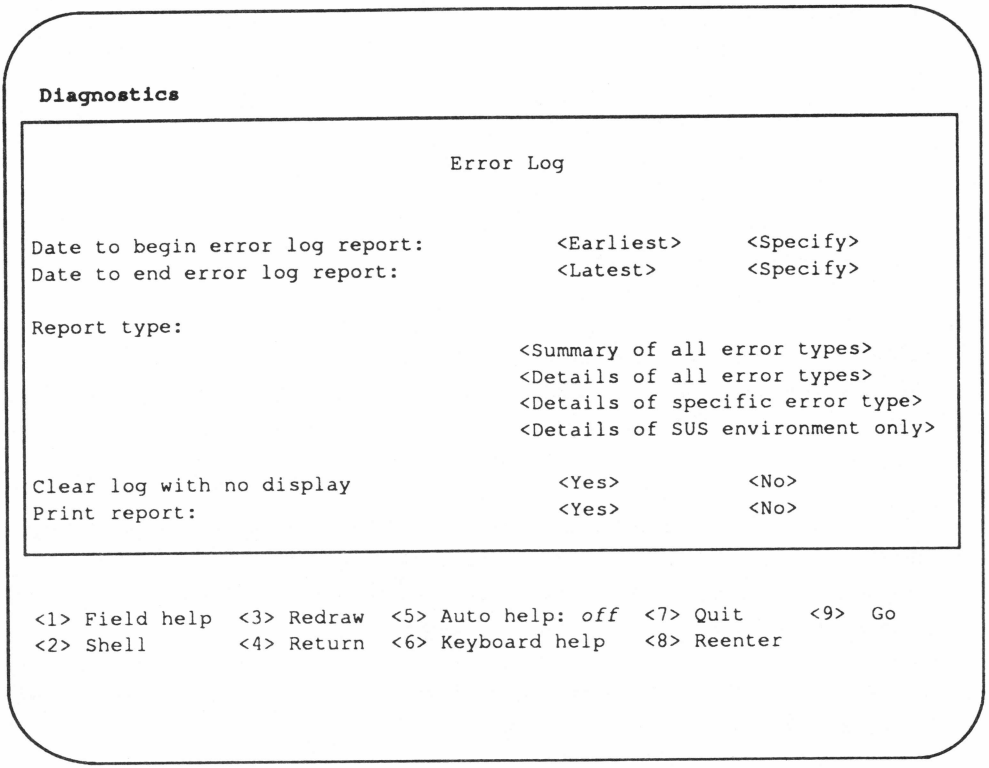

Figure 2-12. Error Log Report Screen

Error Log Parameters

The error log report screen has different parameters (fields) that are set to assumed values to generate the most frequently selected types of error log reports. You may change these parameter values to display (or print) different types of error reports.

When the error log report screen is displayed, the assumed (preselected) parameter values are highlighted and the report may be activated by selecting Go with these parameters selected.

You may however, select different values for each of these parameters by using < **spacebar** > to move the highlights to new values and then using < **cr** > to select the new value.

When all parameter values are highlighted to generate the type of report that you want, select **Go** to activate the error log report that you have selected.

The following subsections provide information about the individual error log parameters.

Date to Begin Error Log Report

This parameter permits you to select the first (oldest) error record to be displayed and/or printed.

The assumed value of `Earliest` starts the error report with the earliest (i.e., first or oldest) record in the log.

The alternate choice for this parameter is `Specify`, which permits you to specify any desired date and time. The error report will then start with the first error record that occurred after the specified date/time.

Date to End Error Log Report

This parameter permits you to select the last (i.e., newest or most recent) error record to be displayed and/or printed.

The assumed value of `Latest` ends the error report with the latest (i.e., last, newest, or most-recent) record in the log.

The alternate choice for this parameter is `Specify`, which permits you to specify any desired date and time. The error report will then end with the last error record that occurred before the specified date/time.

Report Type

This parameter permits you to select one of several types of reports.

The assumed value of `Summary of all error types` selects a summary report that identifies only the number of errors of each type, but does not provide details of any specific error.

The first alternate choice for this parameter is `Details of all error types`. This selection displays the complete error record for all errors that occurred between the selected beginning and ending error log report dates/times.

The second alternate choice for report type is `Details of specific error type`. This selection displays the complete error record for only those errors associated with a specific device.

The third alternate for report type is `Details of SUS environment only`. This selection displays the complete error record of all errors that are associated with the Start-Up Subsystem (SUS) environment. The SUS environment includes errors that occur during the system start-up or power fail recovery operations.

Clear Log with No Display

The assumed value of `No` displays the log but does not clear the log. Changing this parameter to `Yes` clears the log but does not display the error records.

Print Report

The assumed value of `No` does not output the error log to the printer. Changing this parameter to `Yes` outputs the log to the default system printer.

Performing Modem Equalization Tests

To perform repeated transmissions of specific data patterns on a modem connected to a selected communication link, select **Device Tests** from the **Diagnostics** menu.

The "Selecting Device Tests" subsection describes the entries and selections you must make from within the **Device Tests** and **Test Selection** windows in order to perform a modem equalization test.

The modem equalization test results are reported in the **Test Results** window of the **Device Tests** screen. See Figure 2-10. Refer to the "Test Descriptions" subsection for a description of the available modem equalization tests.

Test Descriptions

This subsection identifies the individual tests available for each type of device. See Table 2-3, which lists all the currently available tests and identifies the test group associated with each test.

Non-SCSI Flexible Disk Tests

The following tests are available for non-SCSI flexible disk devices.

Self Test

The self test activates an on-board diagnostic program that is in the controller firmware of the selected device. The controller returns a test status to identify the results of its self test. Any bad status displays an error report and message in the Test Report.

This test verifies only the internal functions of the controller.

Restore Test

The restore test sends a restore command to the selected disk controller and verifies that the status returned by the controller is good. Any bad status displays an error report and message in the Test Report.

This test verifies functions of both the controller and the drive.

Seek Test

The seek test sends random seek commands that access every surface of every cylinder on the disk and verifies that each read is successful. Any bad status displays an error report and message in the Test Report.

This test verifies functions of both the controller and the drive.

Read Data Test

The read data test reads every block of the disk except the maintenance cylinder and verifies that all read operations terminate successfully. Any bad status displays an error report and message in the Test Report.

This test verifies functions of both the controller and the drive.

Write/Read Data (Maintenance Cylinder Only) Test

The write/read data (maintenance cylinder only) test verifies that at least one block on each maintenance cylinder surface can be written to and read from. Because multiple bad blocks may exist on the maintenance cylinder, a single individual block failure is not reported as a test failure. Errors are reported if the controller detects

multiple read or write failures, or if data miscompares occur in multiple data blocks.

This test verifies functions of both the controller and the drive.

SCSI Flexible Disk Tests

The following tests are available for SCSI flexible disk devices.

Identify Device Test

The identify device test uses the inquiry, read capacity, and diagnostic inquiry functions to identify and display the characteristics of the selected flex device.

Unit Self Test

The unit self test selection uses the diagnostic self test, test unit ready, and rezero functions to verify the operation of the flex controller.

Write/Read/Compare Buffer Test

The write/read/compare buffer test selection writes data to the controller's internal buffer, reads the data, and compares the data read to the data written.

Random Seek Test

The random seek test selection performs a series of 256 seek operations to random block addresses on the selected flex device.

Verify Data Test

The verify data test reads data from all blocks of the flex's user addressable data space and reports the block address of any error that occurs.

Note: *The following are data-destructive type tests. Select with caution.*

> **Caution**
>
> Performing "destructive" diagnostic tests can destroy valuable disk or tape data files. You may or may not be able to recover this data once you activate these destructive tests.

Write/Read Pattern Data

The write/read pattern data test writes a specified data pattern to the flex, reads the same data, and compares the data read to the data written. The test repeats this process with eight different data patterns.

The following list identifies the patterns used (in the order in which they are used).

- AAAAAAAA
- 00000000
- 8406036E
- 01248100
- 55555555
- FFFFFFFF
- C5C5C5C5
- F0F0F0F0

Write/Read Random Data

The write/read random data test writes random data patterns to selected areas of the flex, reads the same data, and compares the data read to the data written.

Format Unit Media Test

The format unit media test physically formats the media in the selected flex disk drive.

Non-SCSI Disk Tests

The following tests are available for non-SCSI disk devices.

Self Test

The self test activates an on-board diagnostic program that is in the controller firmware of the selected device. The controller returns a test status to identify the results of its self test. Any bad status displays an error report and message in the Test Report.

This test verifies only the internal functions of the controller.

Restore Test

The restore test sends a restore command to the selected disk controller and verifies that the status returned by the controller is good. Any bad status displays an error report and message in the Test Report.

This test verifies functions of both the controller and the drive.

Seek Test

The seek test sends random seek commands that access every surface of every cylinder on the disk and verifies that each read is successful. Any bad status displays an error report and message in the Test Report.

This test verifies functions of both the controller and the drive.

Read Data Test

The read data test reads every block of the disk except the maintenance cylinder and verifies that all read operations terminate successfully. Any bad status displays an error report and message in the Test Report.

This test verifies functions of both the controller and the drive.

Write/Read Data (Maintenance Cylinder Only) Test

The write/read data (maintenance cylinder only) test verifies that at least one block on each maintenance cylinder surface can be written to and read from. Because multiple bad blocks may exist on the maintenance cylinder, a single individual block failure is not reported as a test failure. Errors are reported if the controller detects multiple read or write failures, or if data miscompares occur in multiple data blocks.

This test verifies functions of both the controller and the drive.

ECC Test

The ECC test verifies the operation of the selected disk controller's Error Correction Circuitry (ECC). The test performs a normal write

operation to a maintenance cylinder block and then performs a read of the data and ECC information from that same block. The test inverts several bits of data in that block and then writes the data and ECC information back to the disk. The test reads the same block again, and if the controller ECC logic fails to correct the bad data, an error is reported.

SCSI Disk Tests

The following tests are available for SCSI disk devices.

Unit Self Test

The unit self test activates a series of tests to verify the performance of both the SCSI disk controller and a specified disk drive. The controller performs a combination of restore, seek, verify, and write/read to maintenance cylinder tests. The test verifies the returned status characters and displays an error report and message in the Test Report if a status error occurs.

Restore Test

The restore test sends a restore function to the selected disk drive. The controller terminates the instruction and returns status at the completion of the restore function. The test verifies the functions of both the SCSI controller and the disk drive. The test verifies that the returned status is correct, and any bad status displays an error report and message in the Test Report.

Seek Test

The seek test verifies the data surfaces on the disk drive. The test randomly accesses 512 sectors on the disk and verifies that the

correct sectors were accessed and that each sector was read successfully. Any bad status displays an error report and message in the Test Report.

The seek test verifies functions of both the SCSI controller and the disk drive.

Verify Data Test

The verify data test verifies that every user-accessible block of data on the disk can be read correctly. The test sends a series of verify instructions to the SCSI controller, which then verifies that each sector on the disk can be read without errors. Any bad status displays an error report and message in the Test Report.

The verify data test verifies functions of both the SCSI controller and the disk drive.

Write/Read Data (Maintenance Cylinder Only) Test

The write/read data test verifies that at least one block on each maintenance cylinder surface can be written to and read from. The maintenance cylinder is not typically available to the user, and its use does not destroy customer data. The test writes data patterns to the maintenance cylinder, reads the data, and compares the data read with the data written (byte for byte). Any bad status displays an error report and message in the Test Report.

The write/read data test verifies functions of both the SCSI controller and the disk drive.

Inquiry Test

The inquiry test returns information about the drive and the controller. The test generates a report that displays the revision level of

the controller hardware and firmware, the type of disk unit, its user-addressable capacity, and the physical number of cylinders, heads, and user-formatted sectors and tracks. Any bad status displays an error report and message in the Test Report.

Display Factory Flaw List Test

The display factory flaw list test displays the factory flaw list that was encoded at the factory on a locked part of the disk. Each time the disk is formatted, these flaws are automatically assigned alternates.

Some factory flaw lists cannot be accessed by this function. This does not prevent the controller from reading this flaw list and assigning alternate tracks or blocks to these flawed tracks during the Out-of-Service diagnostics Format Unit utility.

Non-SCSI Tape Tests

The following tests are available for non-SCSI tape devices.

Data Turnaround Test

The data turnaround test verifies the operation of the streaming tape controller address counters. The test writes a sequential pattern (from 0 to FF) to the address counters, using input port 4, latches the counter outputs, and then reads the latches.

Retension Test

The retension test verifies the function of the retension command. This test verifies functions of both the controller and the drive. The test retensions the tape by streaming to end of tape (EOT) and then

rewinding to the beginning of tape (BOT). Any bad controller status displays an error report and message in the Test Report.

Note: *The following are data-destructive type tests. Select with caution.*

> **Caution**
>
> Performing "destructive" diagnostic tests can destroy valuable disk or tape data files. You may or may not be able to recover this data once you activate these 'destructive' tests.

Write/Read Data Test

The write/read data test rewinds the tape, writes one or more blocks, and then reads the same block(s). This test verifies functions of the controller and the drive. If the data read is not the same as the data written, or if the controller returns any bad status, the test displays an error report and message in the Test Report.

This test verifies functions of the controller and the drive.

Write/Read Data with Filemark Test

The write/read data with filemark test rewinds the tape, writes two files of one or more blocks each, and marks the end of each file with a filemark. The test rewinds the tape again and sends two read filemark instructions. If the controller fails to detect the filemarks or returns any bad status, the test displays an error report and message in the Test Report.

This test verifies functions of the controller and the drive.

Erase Test

The erase test rewinds the tape, writes one block of data, sends an erase command, and then tries to read one block. The test expects a no data status. Any other status displays an error report and message in the Test Report.

SCSI Tape Tests

The following tests are available for SCSI tape devices.

Note: *Before each tape test sequence, you must select the recording density used during the test. When the system displays* `High Density? (y/n)`*, enter* `y` *if using a 125 or 150-megabyte drive (600-foot tape, 10,000 bpi), or enter* `n` *if using a 45 or 60-megabyte drive (450 megabyte tape, 8,000 bpi).*

Retension Test

The retension test verifies the function of the retension command. The test retensions the tape by streaming to end of tape (EOT) and then rewinding to the beginning of tape (BOT). Any bad status displays an error report and message in the Test Report. This test verifies the functions of both the SCSI controller and the tape drive.

Verify Tape Test

The verify tape test verifies that data can be read from the tape. The files on the tape must use a single filemark to indicate end of file and two or more consecutive filemarks to indicate end of data. The test rewinds the tape and reads it block by block and indicates the number of the block being read.

For each file, the test identifies the file number, the file size (number of blocks/file), and the number of retries required to read the file. For a unit test, use the tape created by the write file function. Any bad status displays an error report and message in the Test Report. This test verifies functions of both the SCSI controller and the tape drive.

Note: *The following are data-destructive type tests. Select with caution.*

> **Caution**
>
> Performing "destructive" diagnostic tests can destroy valuable disk or tape data files. You may or may not be able to recover this data once you activate these 'destructive' tests.

Write/Read Data

The write/read data test checks the write/read functions of the tape drive. This test destroys data that was previously recorded on this tape and should, therefore, be used only when this loss of data is acceptable.

The test rewinds the tape and writes one or more blocks of data and two filemarks. It then rewinds the tape, and does a byte-for-byte comparison of the expected and observed data. Any bad status displays an error report and message in the Test Report.

This test verifies functions of both the SCSI controller and the tape drive.

Write/Read Data with Filemark

The write/read data with filemark test checks the write/read and filemark functions of the tape drive. The test rewinds the tape, writes two files of one or more blocks each, and marks the end of the first file with one filemark and marks the second file with two filemarks. It then rewinds the tape and searches for the filemarks. If the controller fails to detect the correct filemarks, or if it returns any bad status, the test displays an error report and message in the Test Report.

This test verifies functions of both the controller and the tape drive.

Write Files Test

The write files test checks file writing functions of the tape drive. The test rewinds the tape and writes a series of files to it. Each file contains 32 blocks of data and a filemark. The last file is followed by a double filemark. The test then rewinds the tape and searches for one, two, four, and eight filemarks. After each search, the test reads the data and compares it with the expected data for the specific file. Any bad status displays an error report and message in the Test Report.

This test verifies functions of both the SCSI controller and the tape drive.

Erase Tape

The erase tape test checks the erase functions of the tape drive. The test rewinds the tape and writes one or more blocks of data followed by a double filemark. It then rewinds the tape, sends an erase command to the controller, and attempts to read a block of data, expecting a "no data" status. Any other status displays an error report and message in the Test Report.

This test verifies functions of both the SCSI controller and the tape drive.

End of Media Test

The end of media test writes sequentially numbered blocks of data to the tape, until the controller returns an end of media (EOM) status. The test then writes a single filemark, three more blocks of data, and two more filemarks.

The test rewinds the tape and moves the tape to the first filemark (with a space one filemark command); then a space reverse one block command positions the tape to read and verify the last numbered block. Another space one filemark command positions the tape so that the three blocks after the single filemark can be read and verified.

Parallel Printer Tests

The following parallel printer tests are available.

Form Feed Test

The form feed test sends a form feed control character to the printer, causing it to eject one page.

Line Feed Test

The line feed test sends one carriage return/line feed sequence to the printer, causing it to space the paper one line.

Pattern Test

The pattern test sends one print line to the printer. The data printed in this test may be changed by selecting the `change test parameters` option and entering the desired ASCII or hexadecimal data pattern when the program displays the `Pattern` request. The specified pattern may be 24 ASCII bytes or 12 hexadecimal bytes (24 hexadecimal characters).

tty and Communication Device Tests

See Table 2-3 for information on test groups and types of devices tested relating to the following tests, which are available for tty and communication devices. Some of these tests require the installation of a turnaround test connector. Figure 2-12 contains information about the turnarounds.

Loop 1 Test

The loop 1 test verifies the operation of the hardware controller to the DTE/DCE interface. A data pattern (included in the diagnostic program or optionally entered through the keyboard) is internally transmitted and received 10 times.

The loop 1 test is not available for PMC tty devices.

Loop 2 Test

The loop 2 test verifies the operation of the hardware controller DTE logic, the communication circuit (telephone line), and the remote station's DCE logic. A data pattern (included in the diagnostic program or optionally entered through the keyboard) is transmitted and received 10 times.

To select and enter a specific data pattern, set the **Change Test Parameters** option to **yes** before starting the loop 2 test, and then enter the desired data pattern and baud rate when requested to do so. The test uses the standard program data pattern if this option is set to **no**.

The loop 2 test requires a modem that has manually operated loop 2 test capabilities. A turnaround connector may be used instead of a modem with loop 2 capabilities.

Loop 3 Test

The loop 3 test verifies the operation of the hardware controller DTE logic and the local DCE logic. A data pattern (included in the diagnostic program or optionally entered through the keyboard) is transmitted and received 10 times.

The loop 3 test requires a modem that has local loopback capabilities. A turnaround connector (see Figure 2-12) may be used instead of the modem.

Loop 4 Test

The loop 4 test verifies the operation of the hardware controller DTE logic. A data pattern (included in the diagnostic program or optionally entered through the keyboard) is transmitted and received 10 times.

To select and enter a specific data pattern, set the **Change Test Parameters** option to **yes** before starting the loop 4 test, and then enter the desired data pattern and baud rate when requested to do so. The test uses the standard program data pattern if this option is set to **no**.

The loop 4 test requires the installation of a turnaround test connector at the I/O connector bulkhead or at the modem end of the local modem cable.

Note: *The loop 4 test does not verify the receiver clock signal through the cable. The loop 3 test must be used to detect failures of this cable line.*

Signal Name	Pin No. (9-Pin)	Pin No. (15-Pin)	Pin No. (25-Pin)
RTS	2	2	4
CTS	7	10	5
RCVD	6	9	2
TXD	1	1	3
DSR	3	3	6
DTR	4	4	20
CD	9	12	8
LL			18
TI			25
REC CLK			17
XMIT CLK			24
XTSET			15
Sig GND	8	11	7
Protect GND	5	5	1

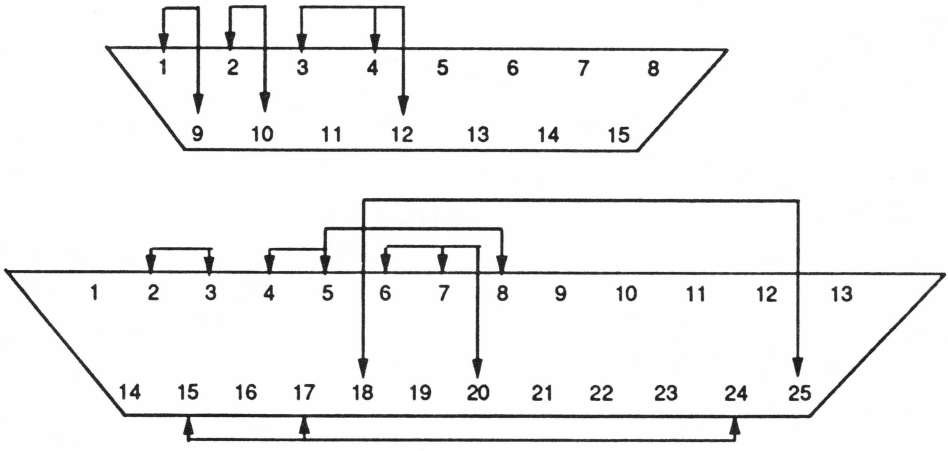

View from pin side

Figure 2-13. Turnaround Test Connectors

Terminal Test (tty Devices Only)

The terminal test verifies that a selected tty device can receive and transmit data correctly and permits the checking and/or changing of basic communications control signals associated with tty devices.

The terminal from which the in-service diagnostic test was activated is called the "command terminal," and the terminal that is selected for testing is called the "test terminal." The terminal test does not permit you to test the same device that you are using to activate the test. Also, you cannot have a printer connected to the same device that you are using to activate the test.

> **WARNING**
>
> Testing a currently-active terminal aborts any activity on it.

After entering tty*xx* on the **Device Tests** screen, and selecting test group **u**, a new screen appears (**TTY/SERIAL PRINTER PORT**) allowing you to enter parameters for the terminal test.

To verify that the test terminal can properly receive data, use the command terminal to set the **TRANSMIT** field to yes and then enter any desired message on the command terminal keyboard. Observe the test terminal to see if it displays the same message that you entered at the command terminal.

To verify that the test terminal can properly transmit data, use the command terminal to set the **RECEIVE** field to yes and then go to the test terminal and enter any desired message on its keyboard. Observe the command terminal to see if it displays the same message that you entered at the test terminal.

You can terminate the terminal test by setting the QUIT field to yes at the command terminal. You cannot terminate the test at the test terminal.

Terminal Test (Serial Printer Devices Only)

The terminal test verifies that the serial printer connected to any terminal connector (0 through 3) can properly receive and print a test message and that the device reacts correctly to the changing of specific communication control signals.

To verify that the printer operates properly, select the terminal test (from the command terminal) and set the TRANSMIT field to yes. Enter any desired data pattern or test message and observe the output at the printer.

You can terminate the test by setting the QUIT field to yes at the command terminal. You cannot terminate the test at the test terminal.

Modem-Status Test

The modem-status test displays the status of the following line signals.

- DSR — Data Set Ready
- CTS — Clear To Send
- RLSD — Receive Line Signal Detector (carrier)
- TI — Test Indicator

The test displays a plus (+) symbol in front of the signal name to indicate that the signal is on (high) or a minus (-) symbol to indicate that the signal is off (low).

Ping Pong Test

The Ping Pong test transmits a test message from one station (the initiator) to another similar station (the responder). The responder returns the same test message to the initiator.

The data in the test message can be changed by entering **y** to the `Change Test Parameters` option.

Continuous Mark Test

The continuous mark test is a modem equalization test that transmits a continuous mark condition (all one bits) to a selected communication link.

All system activity on the selected link must be stopped before starting this test. The test must be terminated (with the < **Ctrl** > **c** key combination) from the system console I/O keyboard.

Continuous Space Test

The continuous space test is a modem equalization test that transmits a continuous space condition (all zero bits) to a selected communication link.

All system activity on the selected link must be stopped before starting this test. The test must be terminated (with the < **Ctrl** > **c** key combination) from the system console I/O keyboard.

Transmit Continuous Pattern

The continuous pattern test is a modem equalization test that transmits a repeated bit pattern to a selected communication link. The utility permits the entry of any desired data pattern (maximum of 24 bytes) or selects a specific data pattern (ASCII 07, 59, 2b, 4b, 4d) from the utility program code.

All system activity on the selected link must be stopped before starting this test. The test must be terminated (with the < **Ctrl** > **c** key combination) from the system console I/O keyboard.

FW-version Test

The FW-version test displays information about the current version numbers for the following MPCC hardware/software components.

- ROM
- Download software
- MPCC firmware
- MPCC hardware (chip set)

Status-short Test

The status-short test displays the ending status of the MPCC level 0 (start-up) diagnostics and the MPCC download software. The status displays `pass` or `fail`.

The test also displays the status of each installed line interface module (LIM), and identifies whether or not an application is currently using the LIM.

Status-long Test

The status-long test displays the same information as the Status-short test, but also displays some additional information about each installed LIM.

The additional LIM information includes the LIM type (RS-232 or IHDLC) and the `pass` or `fail` results of the following tests:

- Comm. Controller (SCC) Chip
- Controller Timer
- DMA
- Data Path Loopback
- LIM I/F Signal Control

Reset-unconditional Test

The reset-unconditional test resets the MPCC logic without regard to whether or not it is active (being used).

This test destroys the previously downloaded software of the MPCC and re-initializes the MPCC. You must reload the MPCC software after performing this test.

Reset-conditional Test

The reset-conditional test resets the MPCC logic only if it is not in use.

Section 3
Error Codes

In-Service Diagnostics Error Codes 3-1
Overview 3-1
Error Code Format (WXYZ) 3-2
0XYZ Error Codes 3-3
1XYZ Error Codes 3-7
2XYZ Error Codes 3-11
3XYZ Error Codes 3-11
4XYZ Error Codes 3-15
5XYZ Error Codes 3-19
6XYZ Error Codes 3-24
7XYZ Error Codes 3-29
8XYZ Error Codes 3-29
9XYZ Error Codes 3-33
AXYZ Error Codes 3-33
BXYZ Error Codes 3-41
C0YZ (SCSI High Performance Mass Storage Controller/SCSI Mass Storage Controller/SCSI Host Adapter) Error Codes 3-48
MPCC Communication Driver (MPDV) Error Codes 3-49
BMXX Device Error Codes 3-49
BTXX Device Error Codes 3-52
MPXX Device Error Codes 3-56
Start-Up Error Codes 3-60
Overview 3-60

Start-Up Diagnostic Error Reports 3-60
00XX (SSIN) Error Codes 3-61
01XX (SSKE) Error Codes 3-70
02XX (ISL) Error Codes 3-71
04XX (TTY0) Error Codes 3-80
05XX (SSLS) Error Codes 3-80
06XX (SSST) Error Codes 3-82
0DXX (CMS0) Error Codes. 3-86
0EXX (SYT0) Error Codes 3-88
1XXX (EDC0) Error Codes 3-99
2XXX (TOD0) Error Codes 3-103
3XXX (IVT0) Error Codes. 3-105
4XXX (MEM0) Error Codes 3-106
5XXX (MMU0) Error Codes 3-115
7XXX (DK50) Error Codes 3-118
8XXX 3-124
9XXX (MPA0) Error Codes. 3-125
AXXX (STP0) Error Codes 3-128
BXXX (CPC0) Error Codes. 3-130
COXX (HIO0) Error Codes 3-130
DXYZ (SCS0) Error Codes. 3-141
EXYZ (FPP) Error Codes 3-148

Section 3
Error Codes

In-Service Diagnostics Error Codes

Overview

The in-service diagnostics system (DS) detects and reports information about errors that occur during the processing of an in-service diagnostic test. The DS is controlled by and operates with UNIX Operating System (OS) software.

In-service error reports provide different quantities of error information, depending on the type of error that occurred and the cause of the error. The in-service test reports include a description of the error in addition to the error code field. This section describes the valid error code field values that the DS generates.

The DS displays error reports in a standard format shown in Figure 3-1. The error information in this report includes an error code field. This error code is also part of the memory resident Start-Up Subsystem (SUS) error log records (ERROR CODE 1). This section describes all valid in-service diagnostics error codes.

```
Test Configuration                          Current Test Information
Test Mode:              [              ]    Test:          [                  ]
Device:                   [            ]    Device:        [      ]
Options:                                    Status:        [          ]
  Cont-on-Error:            [          ]
  Change Test Parm:         [          ]    Loop:          [        ]
  Concurrent:               [          ]    Failures:      [        ]
Loops:                    [              ]

Error Code:     [       ]                   Test:      [                    ]
Module-Addr:    [                      ]    Device:    [       ]
                                            Loop:      [       ]
"Error Report"
File Error:       ["an operating system error message is displayed here"   ]
INSERV Error:   ["an informative message from the Diagnostic System"      ]
-----------------------------------------Enter<Control C> to stop-------------------
Enter RETURN to continue:
```

Figure 3-1. In-Service Diagnostic Test Reports

Error Code Format (WXYZ)

All in-service diagnostics error codes are four-character hexadecimal values that occur in the format WXYZ, where the values of WXYZ are defined as follows:

W

W identifies the type of device that was being tested when the error occurred. The following list shows the valid values of W and the type of device that is associated with each value.

0 = Sync/async TTY communication controller or device
1 = Processor Memory Controller module
2 = Not currently used by this system
3 = Communication Controller DLC device
4 = Communication Controller Binary Synchronous Tributary device

5 = 5.25-inch floppy disk device
6 = 5.25-inch Winchester disk device
7 = Not currently used
8 = Streaming tape device
9 = ETHERNET controller (not supported)
A = SCSI disk subsystem controller/drive(s)
B = SCSI tape subsystem controller/drive(s)
C = SCSI Mass Storage Controller/SCSI Host Adapter

X

X identifies the name of the specific test that was being processed when the error occurred. The meaning of the X value depends on the value of W (type of device being tested).

For example, if the value of W is 0, X value of 1 means that the loop 1 test failed; but if W is 8 and X is 1, the data turnaround test failed. To determine the meaning of X in any specific error code, refer to the section that describes the error codes for the correct value of W.

YZ

YZ describes the specific condition that caused the error. Some YZ values display the actual hardware status code, and other YZ values define conditions that are not actual hardware failures.

0XYZ Error Codes

All error codes with the most significant character set to zero (0) identify errors that occurred during a test of a synchronous/ asynchronous TTY terminal controller. The following list identifies the values and meanings of the character X.

1 = The Loop 1 test failed
2 = The Loop 2 test failed
3 = The Loop 3 test failed
4 = The Loop 4 test failed
5 = The Ping Pong test failed
6 = The Transmit Continuous Mark utility failed
7 = The Transmit Continuous Space utility failed
8 = The Transmit Continuous Pattern utility failed
9 = The Basic Mode Echo test failed

The following list shows all valid values of YZ:

0X01

The selected link is busy. All system activity on this link must be stopped before starting this test.

0X02

The data pattern that was received is not the same as the transmitted data pattern.

0X03

The device name specified an invalid controller number.

0X04

The device name specified a controller that is not installed in the system.

0X05

The device name specified an invalid device number.

0X06

The requested diagnostic function is invalid or cannot be performed.

0X07

The buffer size, as specified during the selection of the data capture utility, is not valid.

0X08

The number of loops (loop count) specified during the test selection is not valid.

0X09

An invalid tally type was specified during the selection of the driver tally utility.

0X0a

A parity error occurred.

0X0b

A framing error occurred.

0X0c

A data overrun occurred.

0X0d

A data overflow occurred.

0X0e

A link time-out occurred.

0X0f

The selected controller is not ready.

0X10

The selected communication link is not established. The most probable causes are that the loop function of the modem is not enabled or the turnaround connector is not installed.

0X11

An invalid transmission speed (baud rate) was specified during the selection of this test.

0X12

The turnaround test connector is installed. This connector must be removed before the selected sequence can be processed.

0X13

One or more of the communication line signals (DSR, DTR, etc.) is in the wrong state.

0X14

A data transmission error occurred during the selected test.

0X15

The data capture process is already active for the specified link.

0Xff

A problem prevents the diagnostic test from starting. This error is usually caused by a software or file problem and does not indicate a hardware failure.

1XYZ Error Codes

All error codes with the most significant character set to one (1) identify errors that occurred during a test of a PMC TTY device. The following list identifies the valid values and meanings of the character X.

1 = The Loop 1 test failed
2 = The Loop 2 test failed
3 = The Loop 3 test failed
4 = The Loop 4 test failed
5 = The Ping Pong test failed
6 = The Transmit Continuous Mark utility failed
7 = The Transmit Continuous Space utility failed
8 = The Transmit Continuous Pattern utility failed
9 = The Basic Mode Echo test failed

The following list shows all valid values of YZ:

1X01

The selected link is busy. All system activity on this link must be stopped before starting this test.

1X02

The data pattern that was received is not the same as the transmitted data pattern.

1X03

The device name specified an invalid controller number.

1X04

The device name specified a controller that is not installed in the system.

1X05

The device name specified an invalid device number.

1X06

The requested diagnostic function is invalid or cannot be performed.

1X07

The buffer size, as specified during the selection of the data capture utility, is not valid.

1X08

The number of loops (loop count) specified during the test selection is not valid.

1X09

An invalid tally type was specified during the selection of the driver tally utility.

1X0a

A parity error occurred.

1X0b

A frame check sequence error occurred.

1X0c

A data overrun occurred.

1X0d

A data overflow occurred.

1X0e

A link time-out occurred.

1X0f

The selected controller is not ready.

1X10

The selected communication link is not established. The most probable causes are that the loop function of the modem is not enabled, or the turnaround connector is not installed.

1X11

An invalid transmission speed (baud rate) was specified during the selection of this test.

1X12

The turnaround test connector is installed. This connector must be removed before the selected sequence can be processed.

1X13

One or more of the communication line signals (DSR, DTR, etc.) is in the wrong state.

1X14

A data transmission error occurred during the selected test.

1X15

The data capture process is already active for the specified link.

1Xff

A problem prevents the diagnostic test from starting. This error is usually caused by a software or file problem and does not indicate a hardware failure.

2XYZ Error Codes

The DS does not currently use these error codes.

3XYZ Error Codes

All error codes with the most significant character set to three (3) identify errors that occurred during a test of an MPA communication device. The following list identifies the valid values and meanings of the character X.

1 = The Loop 1 test failed
2 = The Loop 2 test failed
3 = The Loop 3 test failed
4 = The Loop 4 test failed
5 = The Ping Pong test failed
6 = The Transmit Continuous Mark utility failed
7 = The Transmit Continuous Space utility failed
8 = The Transmit Continuous Pattern utility failed
9 = The Echo test failed

The following list shows all valid values of YZ:

3X01

The selected link is busy. All system activity on this link must be stopped before starting this test.

3X02

The data pattern that was received is not the same as the transmitted data pattern.

3X03

The device name specified an invalid controller number.

3X04

The device name specified a controller that is not installed in the system.

3X05

The device name specified an invalid device number.

3X06

The requested diagnostic function is invalid or cannot be performed.

3X07

The buffer size, as specified during the selection of the data capture utility, is not valid.

3X08

The number of loops (loop count) specified during the test selection is not valid.

3X09

An invalid tally type was specified during the selection of the driver tally utility.

3X0a

A parity error occurred.

3X0b

A frame check sequence error occurred.

3X0c

A data overrun occurred.

3X0d

A data overflow occurred.

3X0e

A link time-out occurred.

3X0f

The selected controller is not ready.

3X10

The selected communication link is not established. The most probable causes are that the loop function of the modem is not enabled, or the turnaround connector is not installed.

3X11

An invalid transmission speed (baud rate) was specified during the selection of this test.

3X12

The turnaround test connector is installed. This connector must be removed before the selected sequence can be processed.

3X13

One or more of the communication line signals (DSR, DTR, etc.) is in the wrong state.

3X14

A data transmission error occurred during the selected test.

3X15

The data capture process is already active for the specified link.

3Xff

A problem prevents the diagnostic test from starting. This error is usually caused by a software or file problem and does not indicate a hardware failure.

4XYZ Error Codes

All error codes with the most significant character set to four (4) identify errors that occurred during a test of an MPA Bisynchronous Tributary communication device. The following list identifies the valid values and meanings of the character X.

1 = The Loop 1 test failed
2 = The Loop 2 test failed
3 = The Loop 3 test failed
4 = The Loop 4 test failed
5 = The Ping Pong test failed
6 = The Transmit Continuous Mark utility failed
7 = The Transmit Continuous Space utility failed
8 = The Transmit Continuous Pattern utility failed
9 = The Echo test failed

The following list shows all valid values of YZ.

4X01

The selected link is busy. All system activity on this link must be stopped before starting this test.

4X02

The data pattern that was received is not the same as the transmitted data pattern.

4X03

The device name specified an invalid controller number.

4X04

The device name specified a controller that is not installed in the system.

4X05

The device name specified an invalid device number.

4X06

The requested diagnostic function cannot be performed.

4X07

The buffer size, as specified during the selection of the data capture utility, is not valid.

4X08

The number of loops (loop count) specified during the test selection is not valid.

4X09

An invalid tally type was specified during the selection of the driver tally utility.

4X0a

A parity error occurred.

4X0b

A frame check sequence error occurred.

4X0c

A data overrun occurred.

4X0d

A data overflow occurred.

4X0e

A link time-out occurred.

4X0f

The selected controller is not ready.

4X10

The selected communication link is not established. The most probable causes are that the loop function of the modem is not enabled, or the turnaround connector is not installed.

4X11

An invalid transmission speed (baud rate) was specified during the selection of this test.

4X12

The turnaround test connector is installed. This connector must be removed before the selected sequence can be processed.

4X13

One or more of the communication line signals (DSR, DTR, etc.) is in the wrong state.

4X14

A data transmission error ocurred during the selected test.

4X15

The data capture process is already active for the specified link.

4Xff

A problem prevents the diagnostic test from starting. This error is usually caused by a software or file problem and does not indicate a hardware failure.

5XYZ Error Codes

All error codes with the most significant character set to five (5) identify errors that occurred during a test of a 5.25-Inch Disk Controller or one of the 5.25-Inch Floppy Disk drives connected to that controller. The following list identifies the valid values and meanings of the character X.

2 = The Self Test diagnostic failed
3 = The Controller Buffer test failed
4 = The Restore test failed
5 = The Seek test failed
6 = The Read Data--Complete Disk test failed
7 = The Write/Read Data--Maintenance Cylinder test failed
8 = The ECC test failed

The following list shows all valid values of YZ:

5X01

The selected disk drive returned a bad status. More detailed information regarding disk drive status codes may require the assistance of a Unisys Customer Support Center Representative.

5X02

The selected disk drive returned a write fault status.

5X03

The selected disk drive is not ready.

5X04

The selected disk drive returned a seek error status.

5X21

The selected 5.25-Inch Disk Controller returned a bad status.

5X22

The selected 5.25-Inch Disk Controller failed to generate a required interrupt within the allotted time.

5X23

The selected 5.25-Inch Disk Controller caused a system overload error.

5X24

A Multibus parity error occurred.

5X25

A SCSI bus parity error occurred.

5X26

The selected 5.25-Inch Disk Controller stays active.

5X27

The selected 5.25-Inch Disk Controller generated an error, but the specific cause of the error cannot be determined.

5X41

The 5.25-Inch Disk Controller returned an End Of Media (EOM) status. This error is usually caused by the media.

5X42

The 5.25-Inch Disk Controller returned a bad media status. This error is usually caused by the media.

5X43

There is a bad block on the disk media.

5X44

The media in the selected disk drive does not contain the expected format information. Reformat the disk or use a different disk.

5X45

A correctable data error occurred. This error is caused by the media.

5X46

An uncorrectable data error occurred. This error is caused by the media.

5X51

The data read from the selected disk drive is not the same as the data previously written to the same disk. This data miscompare error is caused by either the 5.25-Inch Disk Controller or the disk drive.

5X5f

The 5.25-Inch Disk Controller's Error Check and Correct (ECC) logic failed. The error correction data generated by the controller is not correct for the data error that was created by the diagnostic test.

5X81

The requested function is not valid. This is a software error.

5X82

The specified disk address is not valid. This is a software error.

5X83

The I/O Parameter Block (IOPB) contains a bad parameter. This is a software error.

5Xf0

The disk media is write protected. This is an operator error.

5Xf1

The specified device name is not valid. This is an operator error.

5Xf2

The device name specifies a controller that is not installed in the system. This is an operator error.

5Xf3

The boot block does not contain the correct information. This is an operator error.

5Xf4

A media change status was detected. Since the last drive access, the drive status changed from not ready to ready.

5Xff

A problem prevents the diagnostic test from starting. This error is usually caused by a software or file problem and does not indicate a hardware failure.

6XYZ Error Codes

All error codes with the most significant character set to six (6) identify errors that occurred during a test of a 5.25-Inch Disk Controller or one of the 5.25-Inch Winchester Disk drives connected to that controller. The following list identifies the valid values and meanings of the character X.

2 = The Controller on-board diagnostics failed
3 = The Controller Buffer test failed
4 = The Restore test failed
5 = The Seek test failed
6 = The Read Data-Complete Disk test failed
7 = The Write/Read Data-Maintenance Cylinder test failed
8 = The ECC test failed

The following list shows all valid values of YZ:

6X01

The selected disk drive returned a bad status. More detailed information regarding disk drive status codes may require the assistance of a Unisys Customer Support Center Representative.

6X02

The selected disk drive returned a write fault status.

6X03

The selected disk drive is not ready.

6X04

The selected disk drive returned a seek error status.

6X21

The selected 5.25-Inch Disk Controller returned a bad status.

6X22

The selected 5.25-Inch Disk Controller failed to generate a required interrupt within the allotted time.

6X23

The selected 5.25-Inch Disk Controller caused a system overload error.

6X24

A Multibus parity error occurred.

6X25

A SCSI bus parity error occurred.

6X26

The selected 5.25-Inch Disk Controller stays active.

6X27

The selected 5.25-Inch Disk Controller generated an error, but the specific cause of the error cannot be determined.

6X41

The 5.25-Inch Disk Controller returned an End Of Media (EOM) status. This error is usually caused by the media.

6X42

The 5.25-Inch Disk Controller returned a bad media status. This error is usually caused by the media.

6X43

There is a bad block on the disk media.

6X44

The media in the selected disk drive does not contain the expected format information. Reformat or replace the disk.

6X45

A correctable data error occurred. This error is caused by the media.

6X46

An uncorrectable data error occurred. This error is caused by the media.

6X51

The data read from the selected disk drive is not the same as the data previously written to the same disk. This data miscompare error is caused by either the 5.25-Inch Disk Controller or the disk drive.

6X5f

The 5.25-Inch Disk Controller's Error Check and Correct (ECC) logic failed. The error correction data generated by the controller is not correct for the data error that was created by the diagnostic test.

6X81

The requested function is not valid. This is a software error.

6X82

Specified disk address is not valid. This is a software error.

6X83

The I/O Parameter Block (IOPB) contains a bad parameter. This is a software error.

6Xf0

The disk is write protected. This is an operator error.

6Xf1

The specified device name is not valid. This is an operator error.

6Xf2

The device name specifies a controller that is not installed in the system. This is an operator error.

6Xf3

The boot block does not contain the correct information. This is an operator error.

6Xf4

A media change status was detected.

6Xff

A problem prevents the diagnostic test from starting. This error is usually caused by a software or file problem and does not indicate a hardware failure.

7XYZ Error Codes

The DS does not currently use these error codes.

8XYZ Error Codes

All error codes with the most significant character set to eight (8) identify errors that occurred during a test of the Streaming Tape Controller or one of the streaming tape drives that are connected to that controller. The following list identifies the valid values and meaning of the character X.

1 = The Data Turnaround test failed
2 = The Retension test failed
3 = The Write/Read Data test failed
4 = The Write/Read Filemark test failed
5 = The Erase test failed

The following list shows all valid values of YZ:

8X01

The Streaming Tape Controller indicates that it received an invalid diagnostic instruction. This is a software error.

8X02

The specified device name is not a valid streaming tape device name.

8X03

The selected streaming tape drive returned a busy status.

8X04

The selected streaming tape drive does not contain a tape cartridge or the cartridge is not properly installed. Install the desired cartridge and try the test again.

8X05

The cartridge in the selected streaming tape drive is write protected. This is an operator error. Install the correct cartridge and try the test again.

8X06

An unrecoverable data error occurred during the read/write operation.

8X07

A soft error occurred during the read/write operation. Retries were required or underruns occurred.

8X08

No data was detected during the selected read operation. This error is usually caused by a blank tape.

8X09

The test failed to find the required filemark.

8X0a

The Streaming Tape Controller returned an End Of Tape status.

8X0b

The Streaming Tape Controller cannot select the specified streaming tape drive.

8X0c

The Streaming Tape Controller failed to complete the data turn-around test.

8X0d

The Streaming Tape Controller failed to reset properly.

8X0e

The Streaming Tape Controller generated an error, but the specific cause of the error cannot be determined.

8X0f

The Streaming Tape Controller failed to generate a required interrupt within the allotted time.

8X10

The Streaming Tape drive returned an unexpected End Of File status.

8X11

The Streaming Tape Controller returned an Invalid Command status.

8X12

The device name specifies a Streaming Tape Controller that is not installed in the system. This is an operator error.

8Xf0

A soft error occurred during the tape operation. Retries were required or underruns occurred.

8Xf1

The data pattern that was received from the Streaming Tape Controller is not the same data pattern that was sent to the controller.

8Xf2

The Streaming Tape drive failed to erase the tape. A read data operation indicates that cartridge contains data following an erase function.

8Xff

A problem prevents the Streaming Tape diagnostic test from starting. This error is usually caused by a software or file problem and does not indicate a streaming tape hardware failure.

9XYZ Error Codes

Not supported.

AXYZ Error Codes

All error codes with the most significant character set to A identify errors that occurred during a test of an SCSI controller and the SCSI disk drive associated with that controller. The following list identifies the valid values and meanings of the character X.

0 = The host adapter detected SCSI link errors
1 = The controller detected a recoverable error
2 = The disk drive is not ready
3 = The controller detected a media error
4 = The controller detected a hardware error
5 = The controller detected an illegal request (software attention)
6 = The controller detected a media change status (unit error)
7 = The drive is write protected
8 = The media is blank
D = A software driver error occurred (software error)
E = The controller detected an error
F = A data miscompare occurred

The following list shows all valid values of YZ. Note that the meaning of YZ depends on the value of X.

A0YZ

The value of Y indicates the following:

- 2 = The host adapter could recover from the error indicated by the character Z.
- 3 = The host adapter could not recover from the error indicated by the character Z.

The value of Z identifies the type of error. The following list shows the valid values of Z.

- 1 = Multibus memory error
- 2 = Select/reselect timeout (device does not respond to select)
- 3 = SCSI bus parity error
- 4 = SCSI message parity error
- 5 = Message reject sent
- 6 = Message reject received
- 7 = Message not sent
- 9 = Host adapter hardware error

A040

The command terminated with a bus reset. This usually means that there is a problem with the link protocol.

A050

The command terminated with a command block error. This usually means that there is a problem with the link protocol.

A080

The host adapter received an unexpected reselection from another device on the SCSI bus. This usually indicates an error in the link protocol.

A081

The host adapter detected an ID error. This usually indicates an error in the link protocol.

A082

The host adapter received an unexpected abort from the SCSI bus. This usually indicates an error in the link protocol.

A083

The host adapter received an illegal device reset from the SCSI bus. This usually indicates an error in the link protocol.

A084

The host adapter bus was reset by some other device on the SCSI bus during the performance of an instruction.

A085

A hardware error occurred in the host. No communication is possible on the link.

A086

The host adapter received an unexpected selection from the SCSI bus. This usually indicates an error in the link protocol.

A1YZ

The controller detected a recoverable error. See Table 3-1 for values of YZ.

A2YZ

The disk drive is not ready. See Table 3-1 for the values of YZ.

A3YZ

The controller detected a media error. See Table 3-1 for the values of YZ.

A4YZ

The controller detected a hardware error. See Table 3-1 for the values of YZ.

A5YZ

The controller detected an illegal request (software error). See Table 3-1 for the values of YZ.

A6YZ

The controller detected a media change (unit attention). See Table 3-1 for the values of YZ.

A7YZ

The drive is write protected. See Table 3-1 for the values of YZ.

Table 3-1. SCSI Disk Error Codes (YZ Values)

YZ CODE	DESCRIPTION
02	A seek time-out occurred
04	Drive not ready
05	Function failed to access drive selected
07	Multiple drives responded to a select
10	Address ECC error
11	All recovery actions have failed to read good data
12	Two index detect (sector not found)
13	No data sync character found
15	Seek error
17	Drive write protect switch is on
20	Host requested an illegal command
41	No alternate tracks available - maximum defective tracks exceeded
43	Buffer parity error detected
44	IDB failure detected
46	Data manager failure detected
48	Self test failed
50	Error discrepancy between DM and ECC
51	Error correction using ECC chip was incorrect
52	Recovery disabled
60	Bad IDB state after obtain was issued
61	Controller attempted to directly access an alternate track
62	Buffer/SCSI mismatch of data length
63	IDB parity error detected
70	Illegal command to data manager
71	Buffer not available
72	Bad flag
73	Format complete
74	ECC error
75	Parity error
76	Improper data manager function complete
80	Function aborted by a selective reset from host
81	Function aborted by controller, host is not functioning
82	Host aborted the function, reason unknown
92	Start address plus block count exceeds capacity
93	Maintenance track offset greater than 2 bytes in length
94	Lacing factor greater than that specified in format unit
95	ECC function specified without SLI
96	Illegal option on read capacity function
97	Buffer boundary parameters exceeded
98	Buffer data for host/device not loaded
99	Write to factory defective track attempted

Table 3-1. SCSI Disk Error Codes (YZ Values) (cont.)

YZ CODE	DESCRIPTION
9A	Start address exceeds drive capacity
9B	The format unit data parameters are illegal
9C	The format data length is too large
9D	The user defect list is not evenly divisible by 8
9E	An error was detected in a user defect list entry
9F	Extent bit is on
A0	Relative address modifier bit is on
A1	Recovery failed
A2	RTZ issued after fault
A3	ECC error on write
A4	Recovery successful
A5	Write attempted with STB offset active
A6	Media check condition
A7	Start of day unit test failed
A8	MIC chip failure detected
A9	Start of day re-assign block check error
AA	8155 port failure detected
B0	No dynamic storage available for this command
B3	Error in assigning an alternate to a defective track
B4	An illegal flag was read from the drive
B5	Host transmission error detected
B6	Host error detected on write
B7	Reselection timeout
C0	Function failed to reset drive selected
C1	Selection was attempted with the wrong device
C2	The wrong drive responded to a select command
C3	Switch set to invalid drive type in controller
C5	Seek error status received from the drive
C6	Drive error detected while read/write in progress
C8	Drive faulted, general SMD-0 error status
C9	Drive on wrong cylinder after a seek completed
CA	A drive error was detected during start of day testing
CB	Drive off cylinder

AD01

The selected function is not available. There is a software problem with the diagnostic program or the driver.

AD02

The program sent an illegal function code. There is a software problem with the diagnostic program or the driver.

AD03

The selection function cannot be performed successfully. There is a communication failure on the link.

AD04

The driver cannot communicate with the host adapter. There is a communication failure on the link.

AE00

The function terminated successfully. Although an error was indicated, no error could be found.

AE02

The SCSI controller is busy. Another processor is accessing the controller.

AE12

Some other processor on the SCSI bus has already reserved the SCSI controller.

AF00

The data read was not the data that was expected; however, no additional errors were detected.

AF01

The data read was not the data that was expected, and additional errors were detected.

BXYZ Error Codes

All error codes with the most-significant character set to B identify errors that occurred during a test of a SCSI controller and the SCSI tape drive associated with that controller. The following list identifies the valid values and meanings of the character X.

0 = The host adapter detected SCSI link errors
1 = The controller detected a recoverable error
2 = The disk drive is not ready
3 = The controller detected a media error
4 = The controller detected a hardware error
5 = The controller detected an illegal request (software error)
6 = The controller detected a media change status (unit attention)
7 = The drive is write protected
8 = The tape is blank (contains no data)
D = A driver error occurred (software error)
E = The controller detected an error
F = A data miscompare occurred

The following list shows all valid values of YZ. Note that the meaning of YZ depends on the values of X.

B0YZ

The value of Y indicates the following:

- 2 = The host adapter could recover from the error indicated by the character Z.

- 3 = The host adapter could not recover from the error indicated by the character Z.

The value of Z identifies the type of error. The following list shows the valid values of Z.

- 1 = Multibus bus memory error
- 2 = Select/reselect timeout (device does not respond to select)
- 3 = SCSI bus parity error
- 4 = SCSI message parity error
- 5 = Message reject sent
- 6 = Message reject received

- 7 = Message not sent
- 9 = Host adapter hardware error

B040

The command terminated with a bus reset. This usually means that there is a problem with the link protocol.

B050

The command terminated with a command block error. This usually means that there is a problem with the link protocol.

B080

The host adapter received an unexpected reselection from another device on the SCSI bus. This usually indicates an error in the link protocol.

B081

The host adapter detected an ID error. This usually indicates an error in the link protocol.

B082

The host adapter received an unexpected abort from the SCSI bus. This usually indicates an error in the link protocol.

B083

The host adapter received an illegal device reset from the SCSI bus. This usually indicates an error in the link protocol.

B084

The adapter bus was reset by some other device on the SCSI bus during the performance of an instruction.

B085

A hardware error occurred in the host. No communication is possible on the link.

B086

The host adapter received an unexpected selection from the SCSI bus. This usually indicates an error in the link protocol.

B1YZ

The controller detected a recoverable error. See Table 3-2 for values of YZ.

B2YZ

The disk drive is not ready. See Table 3-2 for the values of YZ.

B3YZ

The controller detected a media error. See Table 3-2 for the values of YZ.

B4YZ

The controller detected a hardware error. See Table 3-2 for the values of YZ.

B5YZ

The controller detected an illegal request (software error). See Table 3-2 for the values of YZ.

B6YZ

The controller detected a media change (unit attention). See Table 3-2 for the values of YZ.

B7YZ

The drive is write protected. See Table 3-2 for the values of YZ.

B8YZ

The tape is blank (contains no data). See Table 3-2 for the values of YZ.

Table 3-2. SCSI Tape Error Codes (YZ Values)

YZ CODE	DESCRIPTION
C0	No error
20	Illegal SCSI command
43	Data buffer parity error
50	No data detected
51	Function was not completed in specified time
52	Tape position error — BOT not indicated after rewind, load, or long erase
53	An error occurred before the requested tape drive command was complete
54	Data buffer is not empty
55	Fixed bit is set while in variable block mode or is not set while in fixed block mode
56	Data transfer error occurred — host to controller
57	Data transfer error occurred — controller to host
58	Verify command does not support byte compare mode
59	Space command does not support spacing to physical end of data
5A	Dignostic self-test not supported
5B	Command sequence error
5C	Unit select error
5D	Variable block length greater than 64K
5E	Unable to obtain ownership of buffer
5F	Command parameter error
60	Status error from target (copy command)

BD01

The selected function is not available. There is a software problem with the diagnostic program or the driver.

BD02

The program sent an illegal function code. There is a software problem with the diagnostic program or the driver.

BD03

The selection function cannot be performed successfully. There is a communication failure on the link.

BD04

The driver cannot communicate with the host adapter. There is a communication failure on the link.

BE00

The function terminated successfully. Although an error was indicated, no error could be found.

BE02

The SCSI controller is busy. Another processor is accessing the controller.

BE12

Some other processor on the SCSI bus has already reserved the SCSI controller.

BF00

The data read was not the data that was expected; however, no additional errors were detected.

BF01

The data read was not the data that was expected, and additional errors were detected.

C0YZ (SCSI High Performance Mass Storage Controller/SCSI Mass Storage Controller/SCSI Host Adapter) Error Codes

All error codes with the most significant character set to C identify HPMSC (High Performance Mass Storage Controller)/SCSI Mass Storage Controller/SCSI Host Adapter errors.

In the error code format C0YZ, the value of Y indicates the following:

- 2 = The host adapter could recover from the error indicated by the character Z.
- 3 = The host adapter could not recover from the error indicated by the character Z.
- 4 or greater = The value of Z identifies the error.

In the error code format C0YZ, the following list shows the values of Z.

1 = A Multibus memory error occurred
2 = Select/reselect timeout (device does not respond to select)
3 = SCSI bus parity error
4 = SCSI message parity error
5 = Message reject sent
6 = Message reject received
7 = Message not sent
8 = Host adapter hardware error

MPCC Communication Driver (MPDV) Error Codes

This section describes the error codes that provide information about errors detected by the Multi-Protocol Communication Controller communication driver software package (process name = MPDV).

Note: *Although the MPDV communication driver is not a part of the diagnostic system, the MPDV error codes are included in this section because they are frequently assumed to be diagnostic error codes.*

Because the MPDV software provides driver facilities for multiple types of MPCC devices, the type of device must be known before the meaning of the MPDV ERROR CODE 1 value can be determined. In this section, the ERROR CODE 1 descriptions are listed according to the MPCC device that is associated with the error. The 'Hardware Name 1' field of the error log entry identifies the MPCC device type. This section identifies error codes associated with the following MPCC device types.

- bmxx
- btxx
- mpxx

BMXX Device Error Codes

These error codes are associated with tally threshold exception handling for Binary Synchronous Multi-Point (3270) devices connected to the communication controller.

The MPCC communication software drive package (MPDV) puts these error codes in a system error record when it detects a driver tally threshold exception (tally threshold exceeded). At the same time that the driver generates this error record, it displays a

message on the system console to identify this error as a threshold exception error. The message also identifies the tally number (id).

The following list identifies the meaning of each tally id number for the 'bmxx' devices:

0001

Text sequences (blocks) received.

0002

Text sequences (blocks) received with errors.

0003

Text sequences (blocks) sent, even retries.

0004

Text sequences (blocks) retransmitted.

0005

Timeouts while waiting for poll.

0006

Timeouts while waiting for ACK or block.

0007

Carrier drops while in receive mode.

0008

Input aborted due to WACK limit.

0009

Output aborted due to TTD limit.

000A

Output aborted due to retry limit.

000B

Modem DSR loss after good connection.

000C

Line establishment failures.

000D

Number of times host system sent WACK.

000E

Number of times the local system sent WACK.

000F

Number of transmitter underruns.

0010

Number of receiver overruns.

0011

Number of forward aborts received.

0012

Number of controller failures

0013

Modem CTS signal loss after good connection.

BTXX Device Error Codes

These error codes are associated with Binary Synchronous Tributary (bisync trib) devices connected to the communication controller. The MPCC communication software drive package (MPDV) generates the error records that contain these codes when one of the Remote Batch Subsystem (RBS) error limits is exceeded. These btxx driver error limit errors are not the same as the thresholding errors that are associated with other MPDV error codes. These btxx error limits can be modified (reconfigured) through the RBS 'Build A Profile' menu sequence.

Note: *The OS performs threshold exception handling for the btxx devices, but no error log entries are made for those exceptions. When a threshold exception occurs, the btxx driver displays a threshold exception message (which includes the tally id number) on the system console.*

The following error code values identify the driver limits that are monitored by the btxx device driver.

0000

The operation terminated successfully (operation complete).

0001

Waiting for line bid limit exceeded.

0002

Line bid limit exceeded.

0003

Disconnect received.

0004

Invalid c. a. id received.

0005

Invalid c. a. id transmitted.

0006

Invalid response to line bid.

0007

Timeout because of no activity during input mode.

0010

Timeout because of failure to physically connect.

0018

A power failure occurred.

0020

An RLSD line signal drop occurred.

0021

A CTS line signal drop occurred.

0022

A DSR line signal drop occurred.

0030

The WACK transmit limit was exceeded.

0031

EOT received aborting input.

0032

Received an invalid response to WACK.

0033

The TTD receive limit was exceeded.

0034

A buffer overflow occurred.

0040

ENQ transmit limit reached.

0041

Received an invalid response to output.

0042

The TTD transmit limit was exceeded.

0043

RVI received, output aborted.

0044

RVI received, output suspended.

0045

WACK receive limit reached.

0046

Data retransmit limit reached.

0047

EOT received, output aborted.

0400

Possible controller failure reported. The controller has previously responded correctly, but has now failed to respond to a request.

7FF0

Write sent while read active.

MPXX Device Error Codes

These error codes are associated with Multi-Protocol Communication Controller (MPCC) or Communication Controller errors that are detected by the controller on-board level 0 Start-Up firmware. The Controller Address field of the error record identifies which of these boards is associated with the error. The following list shows the controller names and their associated address field values.

- MPCC = 00FF1080
- Communication Controller = 00FF1420

The controller's on-board level 0 Start-Up diagnostic firmware detects these errors at Start-Up or reset time and saves the results in hardware registers. The MPCC communication driver (MPDV) software package records the results in the system error log as part of its Start-Of-Day (SOD) initialization routine.

0000-003F

This range of error codes represents the Line Interface Module (LIM) status code. These status codes may identify an actual LIM failure or may identify a LIM slot that is empty. The Hardware Name 1 field identifies the failing LIM slot. For example, mp01 says LIM 1 failed, mp02 says LIM 2 failed, etc.

The bit settings in this error code come from the hardware generated MPCC or Communication Controller Diagnostic Status Field. Figure 3-2 identifies the meaning of each bit position in this range of error (status) codes.

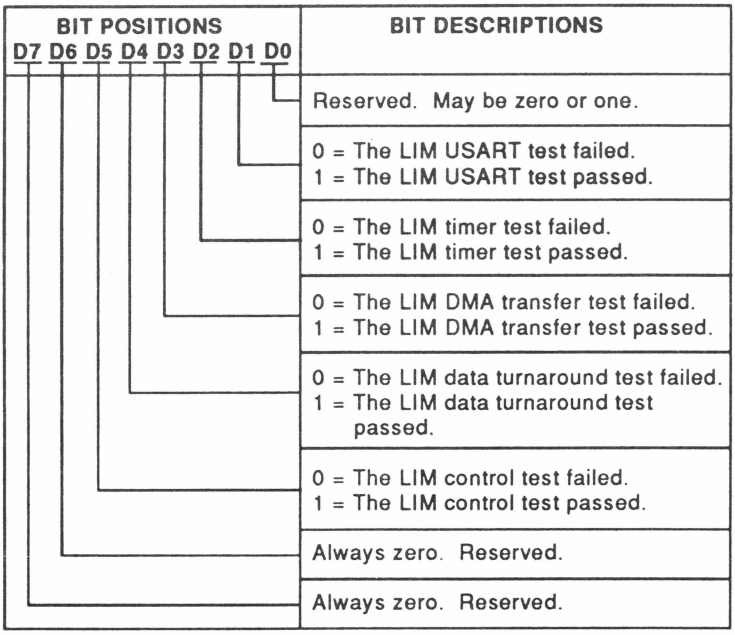

Figure 3-2. Line Interface Module (LIM) Status Codes

0040

One of the four Line Interface Modules (LIM) failed, or LIM slot is empty. The Hardware Name 1 field contains 'mp00' regardless of which LIM failed. The error report does not identify the failing slot.

0086

The Multi-Protocol Communication Controller, the Communication Controller, or the Communication/Peripheral Controller failed to respond to a software instruction within the required time (operation time-out). The Hardware Name 1 field and the Board Address field

in the error log identifies the failing controller. No additional status information is available.

0090

The on-board level 0 Start-Up read status register or clear reset bit test failed.

0091

The on-board level 0 Start-Up register pattern test failed.

0092

The on-board level 0 Start-Up output register test failed.

0093

The on-board level 0 Start-Up command register test failed.

0094

The on-board level 0 Start-Up interrupt test failed.

Start-Up Error Codes

Overview

The Start-Up Subsystem (SUS) detects and reports information about errors that occur during the performance of manual and automatic start-up sequences.

SUS error reports provide different quantities of Start-Up error information, depending on the type of error that occurred and the cause of the error; however all SUS error reports contain an "error code 1" field.

This section contains all of the valid error code 1 values that the SUS generates.

Start-Up Diagnostic Error Reports

Each Start-Up Diagnostic program generates its own unique error codes that are part of a SUS error report. Most diagnostic error reports generate two error codes: ERROR CODE 1 and ERROR CODE 2. Some diagnostic error reports also contain STATUS code(s).

When trying to identify the cause of any failure, in addition to the error codes, you must also consider the STATUS codes and LOGTASK (or DIAGNAME) field as well as any additional information that may be included in the Start-Up error report.

This section lists the Start-Up error codes in ascending numeric sequence.

00XX (SSIN) Error Codes

The Start-Up Subsystem Interrupt Handler (SSIN) error records contain information in the ERROR CODE 1 and address 1 fields. ERROR CODE 1 contains the interrupt vector number of a critical unexpected interrupt, and address 1 contains the approximate program counter value at the time the interrupt occurred.

The following is a list of ERROR CODE 1 values that the SUS Interrupt Handler generates.

0000

A reset of the initial interrupt stack pointer occurred.

0001

A reset of the initial program counter occurred.

0002

A bus error interrupt occurred.

0003

An address interrupt error occurred.

0004

An invalid instruction caused the interrupt.

0005

A divide instruction with divisor of zero caused the interrupt.

0006

The CHK instruction caused the interrupt.

0007

A Trap On Overflow (TRAPV) instruction caused the interrupt.

0008

A Privilege violation generated the interrupt.

0009

The TRACE state generated the interrupt.

000A

A 1010 Emulator instruction (not an implemented function) generated the interrupt.

000B

A 1111 Emulator instruction (not an implemented function) generated the interrupt. This error code is sometimes caused by a bad boot block (block 0) on the load device media.

000C

A microprocessor format error (68020) generated the interrupt.

000D

Uninitialized interrupt vector (68020 only).

000E

A format error occurred (68010 only).

000F

Uninitialized interrupt vector (68010 only).

0010-0017

These vector numbers are not currently assigned.

0018

A spurious interrupt (bus error at the time of the interrupt occurred).

0019

A level 1 autovector interrupt occurred.

001A

A multibus device that is not bus vectored generated the interrupt (level 2 autovector). The following controllers generate non-bus vector interrupts:

- Streaming Tape Controllers
- SCSI Controllers

001B

A level 3 autovector interrupt occurred.

001C

A level 4 autovector interrupt occurred.

001D

A level 5 autovector interrupt occurred.

001E

A level 6 autovector interrupt occurred.

001F

A level 7 autovector interrupt occurred.

0020-002F

A Trap (TRAP) instruction generated the interrupt. The trap instruction specifies one of the 16 interrupt vector numbers.

0030-0003F

These vector numbers are not currently assigned.

0040-0046

These vector numbers are assigned to the Multi-Protocol Communication Controller (MPCC).

0047-004B

These vector numbers are not currently assigned.

004C

This vector number is assigned to the first 5.25-inch Disk Controller and/or the disk control functions of the first Mass Storage Controller in the system.

004D-0053

These vector numbers are not currently assigned.

0054

This vector number is assigned to the second 5.25-inch Disk Controller or the disk functions of the second Mass Storage Controller in the system.

0055-0063

These vector numbers are not currently assigned.

0064

A power-up interrupt occurred.

0065-006F

These vector numbers are not currently assigned.

0070-0075

These vector numbers are assigned to the first (0070) through the sixth (0075) High-Performance Serial I/O Controllers (HPSIO) or Dual HPSIO Controllers.

0076-00BD

These vector numbers are not currently assigned.

00BE-00CE

These vector numbers are reserved for the Multibus controllers that may be programmed and installed by the system end-users.

00CF

A single bit error generated the interrupt (MEMINT).

00D0-00D6

These vector numbers are not currently assigned.

00D7

One or both asynchronous RS-232-C channels generated the interrupt (SPINT).

00D8

This vector number is not currently assigned.

00D9-00DF

One of six (possible) bus vectored Multibus devices generated the interrupt.

00E0

A spurious interrupt (bus error at the time of the interrupt) occurred.

00E1

A Time Of Day Clock alarm (TODINT) generated the interrupt.

00E2

This vector number is not currently assigned.

00E3

The 9513 Interval Timer 4 generated the interrupt.

00E4

The 9513 Interval Timer 3 generated the interrupt.

00E5

The 9513 Interval Timer 2 generated the interrupt.

00E6

The 9513 Interval Timer 1 generated the interrupt.

00E7-00EE

These vector numbers are not currently assigned.

00EF

A Multibus Time-Out Error or a double bit parity error (LMBTERRI) occurred during DMA transfer to Local System Memory.

00F0-00F3

These vector numbers are not currently assigned.

00F4

A cache memory parity error generated the interrupt.

00F5

A local system memory Time-Out Error or double bit parity error (SMFAIL) occurred.

00F6

A power-fail (DOWN) interrupt occurred.

00F7

The service connector (for external test tool) generated the non-maskable interrupt (SXNMI).

00FC-00FF

These vector numbers are not currently assigned.

Note: *Any other ERROR CODE 1 value (00XX) is an invalid unexpected interrupt that the SUS cannot identify.*

01XX (SSKE) Error Codes

The Start-Up Subystem Kernel (SSKE) error records contain two error codes, but ERROR CODE 2 is always set to zero. ERROR CODE 1 describes the cause of the error.

The following is a list of ERROR CODE 1 values that the SUS Kernel software generates.

0101

The COLD START sequence indicates that there is no SUS/OS (Operating System) interface memory area available.

0102

The COLD START sequence indicates that there is no LSM (Local System Memory) in the system.

0103

An unexpected interrupt occurred immediately after control was transferred to the OS.

0104

The COLD START sequence indicates that there is no LSM (Local System Memory) available for the SUS.

0105

The memory availability (size) map that was generated during this warm start is not the same as the map that was created during the last COLD START sequence.

0106

The WARM START sequence indicates that the SUS/OS (Operating System) interface memory area is bad.

0107

The WARM START sequence indicates the the LSM (Local System Memory) is bad.

0108

A critical memory error prevents LSM (Local System Memory) testing.

0109

A Battery Back-Up (BBU) system fault occurred.

02XX (ISL) Error Codes

The Intermediate System Loader (ISL) error records use ERROR CODE 1 to describe the cause of the error. Some ISL error records contain ERROR CODE 2 and status values.

Table 3-3 lists the ISL ERROR CODE 2 values. Figure 3-3 lists the 5.25-inch disk controller status values.

The following list identifies the ERROR CODE 1 values that the ISL generates. The list also describes some of the additional information that the ISL error records provide.

02F1

The specified directory does not contain an entry for the specified filename. This is usually an operator error. The error record provides the following additional information.

- HARDWARE NAME 1 = (LOAD DEVICE HARDWARE NAME)
- ADDRESS 1 = (DIRECTORY I NUMBER)
- ADDRESS 2 = (DIRECTORY DISK BLOCK ADDRESS)

02F2

The specified directory contains an entry for the specified filename, but the file has been deleted. This is usually an operator error. The error record provides the same additional information as the previous error code (02F1).

02F3

The specified directory has too many entries to search (determined by the number of directory blocks). The loader searches only one level in the pointer structure. This is usually an operator error. The error record provides the following additional information:

- HARDWARE NAME 1 = (LOAD DEVICE HARDWARE NAME)
- ADDRESS 1 = (INODE I NUMBER)

02F4

The specified load file is too large to load (determined by the number of disk blocks associated with the file). The loader loads only two levels in the pointer structure. The error record provides the following additional information:

- HARDWARE NAME 1 = (LOAD DEVICE HARDWARE NAME)
- ADDRESS 1 = (LOAD FILE INODE I NUMBER)

02F5

The specified pathname is bad. This error is caused by one of the following:

- The file type associated with the directory inode is not a directory.
- The file type associated with the file inode is neither a directory nor a regular file.
- The specified pathname does not start with the slash (/) character.

This is usually an operator error. The error record provides the following additional information:

- HARDWARE NAME 1 = (LOAD DEVICE HARDWARE NAME)
- ADDRESS 1 = (I NUMBER)

02F6

The specified load file is not the correct file type (must be type $107 or $108). This is usually an operator error. The error record provides the following additional information:

- HARDWARE NAME 1 = (LOAD DEVICE HARDWARE NAME)

- ADDRESS 1 = (I NUMBER)
- ADDRESS 2 = (FIRST BLOCK ADDRESS OF LOAD FILE)
- OBSERVED DATA = (MAGIC NUMBER IN ERROR)

02F7

The file header indicates that the load file is too large for the amount of system memory that is available, or the end address of the load file extends above the one megabyte upper boundary of the system memory load area. This is usually an operator error. The error record provides the following additional information:

- HARDWARE NAME 1 = (LOAD DEVICE HARDWARE NAME)
- ADDRESS 1 = (LOAD AREA START ADDRESS)
- ADDRESS 2 = (LOAD AREA END ADDRESS)
- OBSERVED DATA = (FIRST BLOCK ADDRESS OF LOAD FILE)

02F8

The diagnostic file header indicates that the diagnostic file is larger than the permitted 4 kilobyte maximum file, or the end address of the file extends above the upper boundary of the diagnostic load area. This is usually an operator error. The error record provides the following additional information.

- HARDWARE NAME 1 = (LOAD DEVICE HARDWARE NAME)
- ADDRESS 1 = (LOAD AREA START ADDRESS)
- ADDRESS 2 = (LOAD AREA END ADDRESS)
- OBSERVED DATA = (FIRST BLOCK ADDRESS OF LOAD FILE)

02F9

The file header indicates that the load address is either not a valid system file address or not in the diagnostic load area (for a

diagnostic file). This is usually an operator error. The error record provides the following additional information:

- HARDWARE NAME 1 = (LOAD DEVICE HARDWARE NAME)
- ADDRESS 1 = (LOAD AREA START ADDRESS)
- OBSERVED DATA = (FIRST BLOCK ADDRESS OF LOAD FILE)

02FA

The file header indicates that the text or data relocation size is not zero. There is an unresolved external reference in the load file. The error record provides the following additional information:

- HARDWARE NAME 1 = (LOAD DEVICE HARDWARE NAME)
- ADDRESS 1 = (TEXT SEGMENT SIZE)
- ADDRESS 2 = (DATA SEGMENT SIZE)
- OBSERVED DATA = (FIRST BLOCK ADDRESS OF LOAD FILE)

02FB

The verify transfer routine cannot verify that the data read from the load file is correct. The data read is not the data expected. This may be an operator error, or it may be caused by the following hardware failure:

- Data bit(s) lost during transfer across the bus

The error record provides the following additional information:

- HARDWARE NAME 1 = (LOAD DEVICE NAME)
- ADDRESS 1 = (LOAD DATA ERROR ADDRESS)
- ADDRESS 2 = (VERIFY BUFFER ERROR ADDRESS)
- OBSERVED DATA = (VERIFY BUFFER DATA)
- EXPECTED DATA = (LOADED DATA)

02FC

The file being loaded overlaps the memory range that the system loader occupies. This is usually an operator error. The error record provides the following additional information:

- HARDWARE NAME 1 = (LOAD DEVICE NAME)
- ADDRESS 1 = (LOAD AREA START ADDRESS)
- ADDRESS 2 = (LOAD AREA END ADDRESS)
- OBSERVED DATA = (FIRST BLOCK ADDRESS OF LOAD FILE)

02FD

A disk I/O error occurred during the loading of the load file. The SUS disk driver routine detected a bad status from the disk controller. This is usually a media error. The error record provides the following additional information:

- ERROR CODE 2 = (STATUS RETURNED BY DISK DRIVE)

Table 3-3 shows the ERROR CODE 2 values.

- HARDWARE NAME 1 = (LOAD DEVICE HARDWARE NAME)
- ADDRESS 1 = (DISK BLOCK NUMBER)
- STATUS = (DISK CONTROLLER STATUS BYTES)

Figure 3-3 shows the 5.25-inch disk controller status values.

02FE

The SUS firmware program sent an invalid program number to the Intermediate Load Supervisor (ISL). This indicates that the ISL software module and the SUS ROM program release/version numbers do not agree. Install the correct ROM release/version or update the OS software.

Table 3-3. ISL, TISL, SSLS Error Code 2 Values

ERROR CODE	CAUSE OF ERROR
	DEVICE ERRORS
0001	The drive returned a bad status. Refer to Figure 3-3.
0002	The drive has a write fault error.
0003	The selected unit is not ready.
0004	Seek error.
0005	Restore error.
	CONTROLLER ERRORS
0021	The controller returned a bad status. Refer to Figure 3-3.
0022	The controller failed to generate a required interrupt.
0023	System overload. Usually caused by the program.
0024	A Multibus parity error occurred.
0025	A SASI bus parity error occurred.
0026	The controller returned a busy status.
0027	The controller error cannot be identified.
0028	The controller failed to complete an operation.
0029	Memory access time out error (during DMA).
	MEDIA ERRORS
0041	The drive returned an End Of Media status.
0042	The media is bad.
0043	The selected block is bad.
0044	A format error occurred.
0045	A correctable data error occurred (ECC).
0046	An uncorrectable data error occurred (CRC or ECC).
	SOFTWARE ERRORS
0081	The controller cannot identify the instruction.
0082	The disk address is invalid.
0083	The disk parameter is invalid.
	OPERATOR ERRORS
00F0	The disk is write protected.
00F1	The disk device name is invalid.
00F2	The specified controller is not in the system.
00F3	The boot (load) block is bad.
00F4	A media change status was detected.
00F5	An operator abort (control-C key) status was detected.

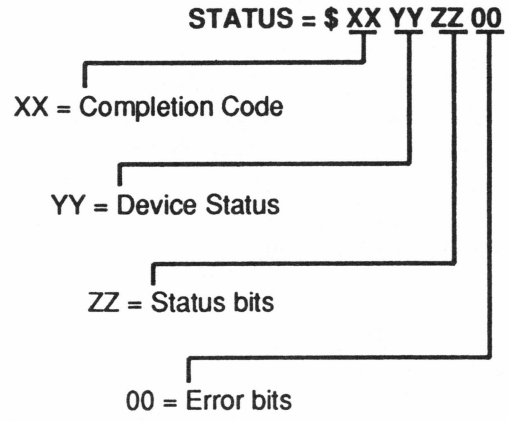

Figure 3-3. 5.25-Inch Disk Completion Codes

Table 3-4. 5.25-Inch Disk Completion Codes

XX BYTE COMPLETION CODE								COMPLETION CODE DESCRIPTION
7	6	5	4	3	2	1	0	
X	X	X	X	X	X	X	1	Controller error
X	X	X	X	X	X	1	X	Parameter error
X	X	X	X	X	X	1	1	Instruction terminated before completion
X	X	X	X	X	1	X	X	Bad block
X	X	X	X	X	1	X	1	Deleted data mark
X	X	X	X	X	1	1	X	Block not found
X	X	X	X	X	1	1	1	CRC/ECC error
X	X	X	X	1	X	X	X	Write protect set
X	X	X	X	1	X	X	1	Write fault
X	X	X	1	X	X	X	X	Time out error
X	X	X	1	X	X	X	1	Host cancel
X	X	X	1	X	X	1	X	Multibus error

Table 3-5. 5.25-Inch Disk Device Status Codes

YY BYTE DEVICE STATUS CODE 7	6	5	4	3	2	1	0	DEVICE STATUS CODE DESCRIPTIONS
0	0	0	0	0	0	0	0	Device ready
X	X	X	X	X	X	X	1	Controller error
X	X	X	X	X	X	1	X	Parameter error
X	X	X	X	X	X	1	1	Device is seeking
X	X	X	X	X	1	X	X	Device not ready
X	X	X	X	X	1	X	1	Device error

Table 3-6. 5.25-Inch Disk Status Bits

STATUS BITS 7	6	5	4	3	2	1	0	STATUS BIT DESCRIPTIONS
X	X	X	X	0	0	0	1	An error occurred during the last I/O to disk
X	X	X	1	0	0	0	X	Seek complete
X	X	1	X	0	0	0	X	Write fault from disk drive
X	1	X	X	0	0	0	X	Drive is ready
1	X	X	X	0	0	0	X	Drive is write protected

NOTE: Bits 1, 2, and 3 are not used. Should always be zero.

Table 3-7. 5.25-Inch Disk Error Bits

ERROR BITS 7	6	5	4	3	2	1	0	ERROR BIT DESCRIPTIONS
X	X	X	X	X	X	1	0	Cannot find track zero
X	X	X	X	X	1	X	0	Instruction terminated before completion
X	X	X	X	1	X	X	0	Cannot find data
X	X	X	1	X	X	X	0	Cannot find requested block
X	X	1	X	X	X	X	0	Cannot find deleted data mark
X	1	X	X	X	X	X	0	CRC or ECC error
1	X	X	X	X	X	X	0	Bad block read

NOTE: Bit 0 is not used. Should always be zero.

04XX (TTY0) Error Codes

The Processor Memory Controller - IV (PMC IV) uses 04XX error code 1 to describe errors associated with TTY I/O ports c and d. These ports are available only on version IV of the PMC.

0401

An error occurred while testing the PMC IV channel c and/or channel d I/O ports. The interrupt vector number register on the 7201 Multiprotocol Serial Communication Controller chip failed to correctly write or read an interrupt vector number.

Error code 2 contains the vector number that could not be written or read correctly.

05XX (SSLS) Error Codes

The Start-Up Subsystem Load Supervisor (SSLS) error records use ERROR CODE 1 to describe the cause of the error.

Table 3-3 lists the SSLS ERROR CODE 2 values. Figure 3-3 lists the 5.25-inch disk controller status values.

The following list identifies the ERROR CODE 1 values that the SSLS generates.

0581

The specified load device is not in the system.

0582

A disk I/O error occurred while loading the Intermediate System Loader (ISL).

0583

The media in the selected load device does not contain a valid load (boot) block.

0584

The specified ISL load address or address range is invalid.

0585

A disk I/O error or streaming tape I/O error occurred while reading the load (boot) block.

0586

The specified load device name is not a valid load device.

0587

The streaming tape media could not be rewound.

0588

The streaming tape controller failed to respond within the required time.

0589

An input buffer memory error occurred during a streaming tape load operation.

058A

The streaming tape media could not be retensioned.

06XX (SSST) Error Codes

The Mass Storage Controller (MSC) Streaming Tape Loader (SSST) error records use both ERROR CODE 1 and ERROR CODE 2 to identify the cause of the error.

The following list describes the ERROR CODE 1 values that the MSC SSST generates. Table 3-8 describes the SSST ERROR CODE 2 values.

0601

The streaming tape cartridge is not installed (or not properly installed) in the tape drive.

0602

The streaming tape drive failed to generate the ONLINE signal.

0603

The streaming tape controller reports an unrecoverable data error. This may be caused by a tape with no data, wrong data format, or a bad block.

0604

There is no data on the streaming tape media.

0606

The streaming tape controller is not ready.

0607

The streaming tape cartridge is not a system installation tape.

0608

The streaming tape file is too large to be loaded in the available memory space.

0609

A bus error occurred while accessing the streaming tape drive.

0681

The specified load device is not in the system.

0682

An I/O error occurred while loading the Intermediate System Loader (ISL).

0683

The media in the selected load device does not contain a valid load (boot) block.

0684

The specified ISL load address or address range is invalid.

0685

A streaming tape I/O error occurred while reading the load (boot) block.

0686

The specified load device cannot be selected.

0687

The streaming tape media could not be rewound.

0688

The streaming tape controller failed to respond within the required time.

0689

An input buffer memory error occurred during a streaming tape load operation.

068A

The streaming tape media could not be retensioned.

06FF

The streaming tape controller reported an error, but the streaming tape loader cannot determine the cause of the error.

Table 3-8. Mass Storage Controller (MSC) SSST Error Code 2 Values

ERROR CODE 2 = XXYY

XX STATUS BYTE 0								YY STATUS BYTE 1								STATUS BIT DESCRIPTION
7	6	5	4	3	2	1	0	7	6	5	4	3	2	1	0	
0	0	0	0	0	0	0	0	0	0	0	0	0	0	0	0	Successfull termination
1	X	X	X	X	X	X	X	X	X	X	X	X	X	X	X	Byte 0 contains error information
X	1	X	X	X	X	X	X	X	X	X	X	X	X	X	X	Cartridge not properly installed
X	X	1	X	X	X	X	X	X	X	X	X	X	X	X	X	Drive ONLINE signal not active
X	X	X	1	X	X	X	X	X	X	X	X	X	X	X	X	Cartridge is write protected
X	X	X	X	1	X	X	X	X	X	X	X	X	X	X	X	End Of Media (EOM) hole detected
X	X	X	X	X	1	X	X	X	X	X	X	X	X	X	X	Unrecoverable data error
X	X	X	X	X	X	1	X	X	X	X	X	X	X	X	X	Block in error not detected
X	X	X	X	X	X	X	1	X	X	X	X	X	X	X	X	Filemark block was read
X	X	X	X	X	X	X	X	1	X	X	X	X	X	X	X	Byte 1 contains error information
X	X	X	X	X	X	X	X	X	1	X	X	X	X	X	X	Tape function byte is invalid
X	X	X	X	X	X	X	X	X	X	1	X	X	X	X	X	No data detected in block
X	X	X	X	X	X	X	X	X	X	X	1	X	X	X	X	Eight or more read retries failed
X	X	X	X	X	X	X	X	X	X	X	X	1	X	X	X	Beginning Of Tape (BOT) detected
X	X	X	X	X	X	X	X	X	X	X	X	X	1	X	X	Not used
X	X	X	X	X	X	X	X	X	X	X	X	X	X	1	X	Not used
X	X	X	X	X	X	X	X	X	X	X	X	X	X	X	1	Controller generated POWER-ON/RESET

NOTE: Multiple bits may be set

0DXX (CMS0) Error Codes

The CMS0 (CMOS Battery-Backed RAM Submodule) diagnostic error records use error code 1 to identify the cause of the error. Some error records contain an error code 2 value to provide additional information about the operation. Error code 2 is set to 0000 if no additional information is available (required).

The following is a list of error code 1 values that the CMS0 diagnostic generates.

0D11

A bus error occurred during the byte access test. The following error code 2 values indicate when the error occurred.

- 0101 = The bus error occurred when the byte was saved in a register
- 0102 = The bus error occurred when the test pattern was written to a byte location
- 0103 = The bus error occurred when the test pattern was read from a byte location
- 0104 = The bus error occurred when the byte was restored from a register

The Board Address field contains the original value of the CMOS Submodule data byte (except when error code 2 = 0101). Address 1 is the address of the CMOS Submodule byte being accessed when the error occurred.

0D12

A bus error occurred during the word access test. The following error code 2 values indicate when the error occurred.

- 0201 = The bus error occurred when the word was saved in a register
- 0202 = The bus error occurred when the test pattern was written to a word location
- 0203 = The bus error occurred when the test pattern was read from a word location
- 0204 = The bus error occurred when the word was restored from a register

The Board Address field contains the original value of the CMOS Submodule data word (except when error code 2 = 0101). Address 1 is the address of the CMOS Submodule word being accessed when the error occurred.

0D21

The data read from the byte being tested is not the same as the test pattern written to the byte. The Board Address field contains the original contents of the CMOS Submodule byte. Address 1 is the address of the CMOS Submodule byte being accessed. Observed Data is the data read from the CMOS byte. Expected Data is the test pattern written to the CMOS byte.

0D22

The data read from the word being tested is not the same as the test pattern written to the word. The Board Address field contains the original contents of the CMOS Submodule word. Address 1 is the address of the CMOS Submodule word being accessed. Observed Data is the data read from the CMOS word. Expected Data is the test pattern written to the CMOS word.

0EXX (SYT0) Error Codes

The MUX-5000 communication controller (SYT0) diagnostic error records use error code 1 to describe the cause of the error. Error code 2 is always zero.

The following is a list of all error code 1 values that the SYT0 diagnostic generates. Error codes 0E00 through 0E19 indicate that a specific self-test function was activated but failed to reach completion. Error codes 0E80 and above identify a specific failure that occurred during a specific start-up test.

0E00

The stack data test started, but did not terminate successfully.

0E01

The stack data test started, but did not terminate successfully.

0E02

The stack checkerboard test started, but did not terminate successfully.

0E03

The reset stack test started, but did not terminate successfully.

0E04

The dynamic RAM size test started, but did not terminate successfully.

0E05

The dynamic RAM parity test started, but did not terminate successfully.

0E06

The stack addressing conflicts test started, but did not terminate successfully.

0E07

The watchdog timer test started, but did not terminate successfully.

0E08

The real-time clock calibration test started, but did not terminate successfully.

0E09

The ROM checksum size test started, but did not terminate successfully.

0E0A

The real-time clock calibration test started, but did not terminate successfully.

0E0B

The RAM address test started, but did not terminate successfully.

0E0C

The RAM checkerboard test started, but did not terminate successfully.

0E0D

The RAM reset test started, but did not terminate successfully.

0E0E

The high-speed serial option test started, but did not terminate successfully.

0E0F

The serial/DMA loopback test started, but did not terminate successfully.

0E10

The serial asynchronous loopback test started, but did not terminate successfully.

0E11

The network RAM data test started, but did not terminate successfully.

0E12

The network RAM address test started, but did not terminate successfully.

0E13

The network RAM checkerboard test started, but did not terminate successfully.

0E14

The reset network RAM test started, but did not terminate successfully.

0E15

The reset COM 9026 verification test started, but did not terminate successfully.

0E16

The waiting for host to start primitive functions test started, but did not terminate successfully.

0E17

The host primitive function data loop test started, but did not terminate successfully.

0E18

The host primitive handshaking test started, but did not terminate successfully.

0E19

The self-test function failed to terminate successfully.

0E80

The code is not presently used.

0E81

A ROM checksum error occurred.

0E82

A stack data test error occurred.

0E83

A stack address test error occurred.

0E84

A stack checkerboard test error occurred.

0E85

A reset stack test error occurred.

0E86

A stack addressing conflict error occurred.

0E87

A watchdog time-out error occurred.

0E88

A real-time clock interrupt error stack test error occurred (no clock detected).

0E89

A real-time clock interrupt error occurred (bad clock pulse width).

0E8A

This code is not presently used.

0E8B

A dynamic RAM address test error occurred.

0E8C

A dynamic RAM checkerboard test error occurred.

0E8D

A reset dynamic RAM test error occurred.

0E8E

A high-speed serial reset state error occurred.

0E8F

A high-speed serial DMA asynchronous loopback test error occurred.

0E90

A serial interrupt driven asynchronous loopback test error occurred.

0E91

This code is not presently used.

0E92

A network RAM address test error occurred.

0E93

A network RAM addressing test error occurred.

0E94

A network RAM checkerboard test error occurred.

0E95

A reset network RAM test error occurred.

0E96

The COM 9026 status register contains a wrong value.

0E97

The COM 9026 network ID DIP switch is set to zero.

0E98

The COM 9026 network interrupt error occurred.

0E9F

A panic error occurred.

0EB0

A network interrupt (unexpected interrupt) error occurred.

0EB1

The COM 9026 unexpected interrupt occurred.

0EB2

The POR bit of the COM 9026 is not set (during interrupt).

0EB6

A dynamic RAM parity error occurred.

0EB7

A watchdog time-out error occurred.

0EB8

The watchdog timer timed out too soon.

0EC0

A data wrap error occurred during the host to HPS interface test.

0EC1

A flag interrupt bit failed to set during the host to HPS interface test.

0EC2

The host interrupt bit failed to set during the host to HPS interface test.

0EC4

The data returned is not the same as the data send during the host to HPS interface test.

0EC5

The host is not ready to accept more data (during the host to HPS interface test).

0EF0

An HPS local bus exception error occurred.

0EF1

An HPS local bus exception error occurred.

0EF2

An invalid instruction exception error occurred.

0EF3

An interrupt exception error occurred.

0EF4

A Trap exception error occurred.

0EF5

An unidentified exception error occurred.

0EFF

The SYT self-test function terminated successfully.

1XXX (EDC0) Error Codes

The Error Detect and Correct (EDC) diagnostic error records contain two error codes. ERROR CODE 1 describes the cause of the error. ERROR CODE 2 is always set to zero.

The following is a list of all ERROR CODE 1 values that the EDC diagnostic generates.

1101

The EDC logic detected an unexpected Single Bit Error (SBE) and generated an SBE interrupt. The diagnostic did not create this error.

1102

A Single Bit Error (SBE), that was created by the diagnostic, failed to generate an SBE interrupt.

1103

The EDC logic failed to detect a Single Bit Error (SBE) that the diagnostic created. The OBSERVED DATA field contains the data pattern that the diagnostic read, and the EXPECTED DATA field contains the data pattern that the diagnostic expected to read.

1104

The EDC logic detected a Single Bit Error (SBE) that the diagnostic created, but failed to correct the bit that caused the error. The OBSERVED DATA field contains the data pattern that the diagnostic read, and the EXPECTED DATA field contains the data pattern that the diagnostic expected to read.

1105

The EDC logic detected a Single Bit Error (SBE) that the diagnostic created, but the syndrome (check) bits in the EDC error status latch do not correctly identify the bit that caused the error. The OBSERVED DATA field contains the syndrome (check) bits from the error status latch, and the EXPECTED DATA field contains the expected syndrome bit value.

1106

The EDC logic detected an error that was created by the diagnostic, but the memory error address that was stored in the EDC error status latch is not correct. The ADDRESS 1 field contains the address read from the error status latch, and the ADDRESS 2 field contains the expected error address.

1107

The EDC logic detected a Single Bit Error (SBE) and tried to correct the error, but corrected (inverted) one or more bits that are not associated with the bit(s) that caused the error. The OBSERVED DATA field contains the data pattern read from the error address, and the EXPECTED DATA field contains the expected data pattern.

1108

The EDC logic corrected (updated) a data pattern that the diagnostic was writing to memory while the correction (update) logic was disabled. The OBSERVED DATA field contains the pattern that was written to memory, and the EXPECTED DATA field contains the pattern that the diagnostic was trying to write.

1109

The EDC logic failed to correct (update) a wrong data pattern that the diagnostic was writing to memory while the correction (update) logic was enabled. The OBSERVED DATA field contains the pattern that was written to memory, and the EXPECTED DATA field contains the pattern that the diagnostic was trying to write.

1110

An unexpected Double Bit Error (DBE) interrupt occurred while the diagnostic was performing a Single Bit Error (SBE) detection and/or correction test. The error was not created by the diagnostic. The diagnostic does not perform DBE logic verification until the SBE testing is complete.

1115

The EDC diagnostic requires the availability of at least one good test word in each of two memory 'clicks'. The EDC diagnostic cannot find the required number of good test words within the memory 'click' map (supplied by SUS). The ADDRESS 1 field contains the physical address of the last word that caused an error. The OBSERVED DATA field contains the data read from the error address, and the EXPECTED DATA field contains the data that the diagnostic expected to read from that address.

1116

The EDC diagnostic cannot be processed because the current memory 'click' map (created during the last COLD start sequence) indicates that there is no known good memory available.

1201

The EDC logic detected an unexpected Single Bit Error (SBE) and generated an SBE interrupt. This error was NOT created by the diagnostic.

1206

The EDC logic detected an error that was created by the diagnostic, but the memory error address stored in the EDC error status latch is not correct. The ADDRESS 1 field contains the address read from the error status latch, and the ADDRESS 2 field contains the expected error address.

1211

A Double Bit Error (DBE) that was created by the diagnostic failed to generate a DBE interrupt.

1212

The EDC logic failed to detect a Double Bit Error (DBE) that was created by the diagnostic. The OBSERVED DATA field contains the data that the diagnostic read, and the EXPECTED DATA field contains the data that the diagnostic expected to read.

1213

The EDC logic detected a Double Bit Error (DBE) that was created by the diagnostic, but the syndrome bits in the EDC error status latch do not correctly indicate that a double bit error occurred. The bits that were read from the error status latch, and the OBSERVED DATA field contains the syndrome (check) and the EXPECTED DATA field contains the expected syndrome bit value.

1215

The EDC diagnostic cannot find the required number of good test words within the memory 'click' map (created by the SUS) during the last COLD start sequence. The diagnostic requires at least one good test word in each of two memory 'clicks', The ADDRESS 1 field contains the physical address of the last word that caused an error. The OBSERVED DATA field contains the data read from the error address, and the EXPECTED DATA field contains the data that the diagnostic expected from that address.

1216

The EDC diagnostic cannot be processed because the current memory 'click' map (created during the last COLD start sequence) indicates that there is no known good memory available.

2XXX (TOD0) Error Codes

Time-Of-Day (TOD) clock diagnostic error records contain two error codes. ERROR CODE 1 describes the cause of the error. ERROR CODE 2 contains the number of the counter that failed.

The following is a list of all ERROR CODE 1 values that the TOD diagnostic generates.

2101

The TOD counter contains one or more bits that failed to change state. ERROR CODE 2 identifies the failing counter.

2102

The TOD counter latch contains one or more bits that failed to change state. ERROR CODE 2 identifies the failing counter.

2103

The TOD diagnostic tried to access a specific TOD counter address, but the data returned indicates that the wrong address was accessed. ERROR CODE 2 identifies the failing counter.

2204

One of the TOD counters failed to reset properly. ERROR CODE 2 identifies the failing counter.

2305

One of the TOD counters failed to count in the correct sequence. ERROR CODE 2 identifies the failing counter.

2406

The TOD clock failed to generate an interrupt.

2407

The TOD clock status register failed to reset.

3XXX (IVT0) Error Codes

The Interval Timer (IVT) diagnostic error records contain two error codes. ERROR CODE 1 describes the cause of the error. ERROR CODE 2 contains the number (1 through 4) of the failing timer.

The following is a list of all ERROR CODE 1 values that the IVT diagnostic generates.

3101

The interval timer contains one or more bits that failed to change state. ERROR CODE 2 identifies the failing timer.

3202

The interval timer failed to count in the correct sequence. ERROR CODE 2 identifies the failing timer.

3303

The interval timer failed to generate a required interrupt. ERROR CODE 2 identifies the failing timer.

3304

The interval timer generated an unexpected interrupt. ERROR CODE 2 identifies the failing timer.

4XXX (MEM0) Error Codes

The MEM0 error codes identify failures of the Memory Array Modules and failures of the PMC Cache Memory logic.

All MEMO error codes from 4101 to 4304 identify Memory Array Module errors, and MEMO error codes 4501 and greater identify PMC Cache Memory errors.

The Memory (MEM) diagnostic error records contain two error codes. ERROR CODE 1 describes the cause of the error. ERROR CODE 2 is set to zero for all errors except Single Bit Errors (where ERROR CODE 1 is 4103 or 4203). For Single Bit Errors (SBE), ERROR CODE 2 displays the contents of the PMC module EDC diagnostic error status latch (a port 0 read operation).

The following is a list of all ERROR CODE 1 values that the MEM diagnostic generates:

4101

The MEM diagnostic detected a multiple bit error. The ADDRESS 1 field contains the address of the error. The OBSERVED DATA field contains the data that was read from that address, and the EXPECTED DATA field contains the data pattern that the diagnostic expected to read from that address.

4102

One or more memory address lines failed, causing the diagnostic to access the wrong memory location. The OBSERVED DATA field contains the data that was read from the wrong address, and the EXPECTED DATA field contains the data that is stored in the desired address.

4103

The MEM diagnostic detected one or more Single Bit Errors (SBE) within a specified group of memory locations. The ERROR CODE 2 field displays the contents of the PMC module EDC diagnostic error status latch (a port 0 read).

The ADDRESS 1 field identifies the failing (error) address.

Note: *Single Bit Errors that occur during a Start-Up sequence are recorded in the error log but are not displayed on the CRT during the Start-Up.*

Use the following steps to identify the board and the chip that contains the failing bit.

1. Determine from the 'click' map or by physical inspection of the module, whether the system contains 16- or 32-bit memory modules and whether the modules are .5, 1, 2, or 4 megabyte boards.

2. From the following figures, select the 'MEM error code 2' figure that applies to the type of module(s) in your system.

3. Use the appropriate bits in the selected figure to determine which module (or module pair), failed and, for 32-bit modules, which word (even or odd) failed. At this point, you may either replace the failing module or continue this procedure to locate and replace the failing chip.

4. From the same 'MEM error code 2' figure used in Step 3, determine which bank (row) of chips contains the failing bit, and identify the value of the syndrome bits.

5. Knowing the failing bank (row) and the syndrome value, use the RAM chip location chart to identify the failing bit and the location of the failing RAM chip.

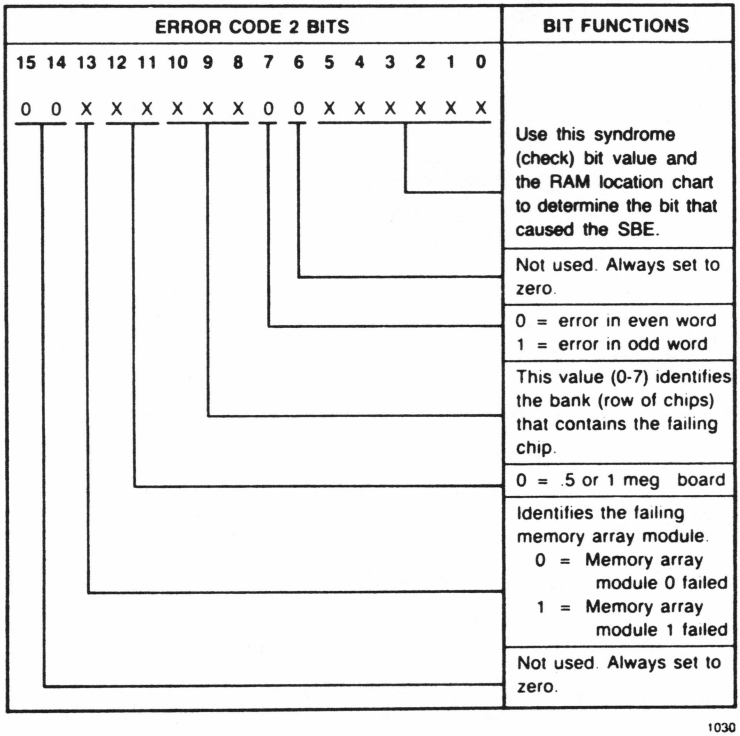

Figure 3-4. MEM Error Code 2 Bits (for .5 or 1 Megabyte Memory Boards)

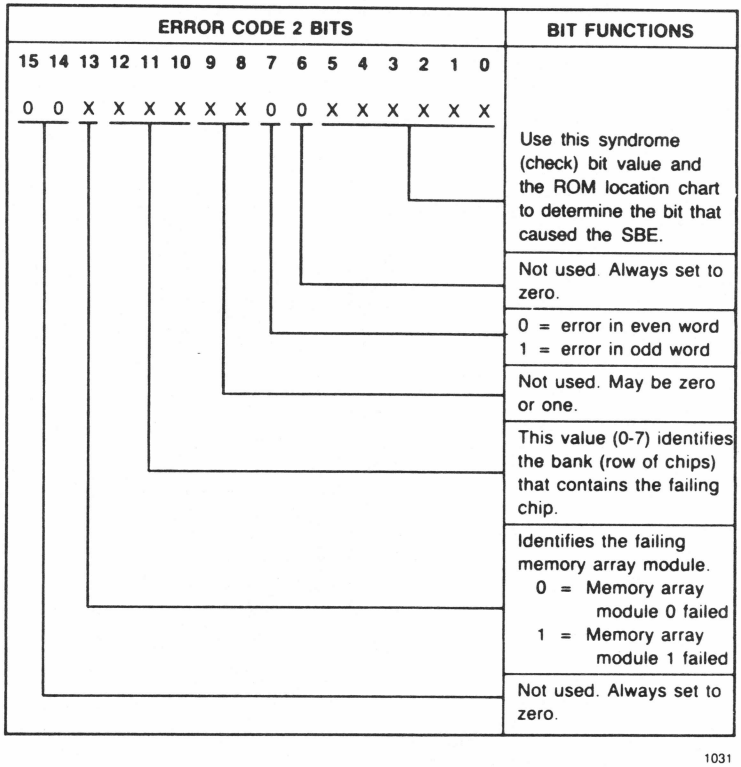

Figure 3-5. MEM Error Code 2 Bits (for 2 or 4 Megabyte Memory Boards)

Table 3-9. RAM Chip Locations (Single Bit Errors)

SYNDROME (CHECK) BIT VALUES (Value of bits 0-5 in MEM error Code 2 Chart)	FAILING DATA OR CHECK BIT	FAILING RAM CHIP LOCATION							
		FAILING MEMORY BANK (Value of bits 8-10 or 10-12 MEM error code 2 chart)							
		0	1	2	3	4	5	6	7
01	SCB0	6E	6F	6G	7H	7A	6B	6C	6D
02	SCB1	5E	5F	5G	6H	6A	5B	5C	5D
04	SCB2	4E	4F	4G	5H	5A	4B	4C	4D
08	SCB3	3E	3F	3G	4H	4A	3B	3C	3D
0B	D1	21E	21F	21G	22H	22A	21B	21C	21D
0E	D0	22E	22F	22G	23H	23A	22B	22C	22D
10	SCB4	2E	2F	2G	3H	3A	2B	2C	2D
13	D2	20E	20F	20G	21H	21A	20B	20C	20D
15	D3	19E	19F	19G	20H	20A	19B	19C	19D
16	D4	18E	18F	18G	19H	19A	18B	18C	18D
19	D5	17E	17F	17G	18H	18A	17B	17C	17D
1A	D6	16E	16F	16G	17H	17A	16B	16C	16D
1C	D7	15E	15F	15G	16H	16A	15B	15C	15D
20	SCB5	1E	1F	1G	2H	2A	1B	1C	1D
23	D8	14E	14F	14G	15H	15A	14B	14C	14D
25	D9	13E	13F	13G	14H	14A	13B	13C	13D
26	D10	12E	12F	12G	13H	13A	12B	12C	12D
29	D11	11E	11F	11G	12H	12A	11B	11C	11D
2A	D12	10E	10F	10G	11H	11A	10B	10C	10D
2C	D13	9E	9F	9G	10H	10A	9B	9C	9D
31	D14	8E	8F	8G	9H	9A	8B	8C	8D
34	D15	7E	7F	7G	8H	8A	7B	7C	7D

4201

The MEM diagnostic detected a multiple bit error. The ADDRESS 1 field contains the address of the error. The OBSERVED DATA field contains the data that was read from that address, and the EXPECTED DATA field contains the data pattern that the diagnostic expected to read from that address.

4202

One or more memory address lines failed, causing the diagnostic to access the wrong memory location. The OBSERVED DATA field contains the data that was read from the wrong address, and the EXPECTED DATA field contains the data that is stored in the desired address.

4203

The MEM diagnostic detected one or more Single Bit Errors (SBE) within a specified group of memory locations. The ERROR CODE 2 field displays the contents of the PMC module EDC diagnostic error status latch (a port 0 read).

Use bits 13 and 14 in Figure 3-4 or 3-5 to identify the memory board that failed. After finding which board failed, you must determine (by examining the 'click' map or by physical inspection of the board) whether the failing board is a .5, 1, 2, or 4 megabyte board. From this point, use only Figure 3-5 to identify 4 megabyte board failures. Next, from the appropriate figure, determine the bank on the board that contains the failing chip and the syndrome pattern that is associated with the failure. Then, use Table 3-9 to identify the data bit or check bit that failed and the chip that contains the failing bit. Replace either the memory board or the chip that contains the failing bit(s).

The ADDRESS 1 field identifies the failing (error) address.

4304

Memory address line A22 failed to select the correct memory array board. The HARDWARE NAME 1 field identifies the most probable cause of the error and the HARDWARE NAME 2 field identifies the next most probable cause.

The following list of MEM0 error codes (4X01 through 4X15) report PMC Cache Memory logic failures that are detected by the SUS. In this list, the value of the X may be from 5 (4501) to A (4A15). To correct any 4501 to 4A15 failure, replace the PMC board.

4X01

A cache memory parity error occurred.

4X02

An unexpected bus error occurred during the cache memory test.

4X03

One or more cache memory (data cache) data bits failed to change from zero to one or from one to zero.

4X04

One or more cache memory (data cache) address bits failed to change from zero to one or from one to zero.

4X05

The cache memory parity logic failed to function properly.

4X06

The cache memory (data cache) tag field address error occurred.

4X07

A cache memory parity error failed to cause a fetch from system memory.

4X08

A write operation failed to correctly update either cache memory or system memory.

4X09

A word read operation failed to correctly update cache memory.

4X0A

A byte read operation failed to correctly update cache memory.

4X0C

The cache memory test cannot be performed because there is not enough good contiguous memory available.

4X0D

The cache memory diagnostic logic failed.

4X0E

An unexpected cache memory parity error occurred.

4X0F

One or more cache memory (program cache) data bits failed to change from zero to one or from one to zero.

4X10

One or more cache memory (program cache) address bits failed to change from zero to one or from one to zero.

4X11

A cache memory (program cache) tag field address error occurred.

4X12

An ATC (CPU) read/write failure occurred.

4X13

An ATC (CPU) data miscompare failure occurred. The EXPDATA and OBSDATA fields identify the expected and observed data patterns.

4X14

An ATC (DMA) read/write failure occurred.

4x15

An ATC (DMA) data miscompare failure occurred. The EXPDATA and OBSDATA fields identify the expected and observed data patterns.

5XXX (MMU0) Error Codes

The Memory Management Unit (MMU) error records contain two error codes. ERROR CODE 1 describes the cause of the error. ERROR CODE 2 is always set to zero.

The following is a list of all ERROR CODE 1 values that the MMU diagnostic generates.

5101

One or more MMU context register bits failed to change from a zero to a one or from a one to zero.

5202

One or more MMU segment map RAM bits failed to change from a zero to a one or from a one to a zero.

5203

The MMU segment RAM address decode logic failed. The diagnostic tried to access a specified address, but the observed data indicates that a different address was accessed.

5304

One or more MMU page RAM bits failed to change from a zero to a one or from a one to a zero.

5305

The MMU segment RAM address decode logic failed. The MMU diagnostic tried to access a specified address, but the observed data indicates that a different address was accessed.

540C

The MMU address space decode logic failed. One or more of the following conditions exist.

- Page map data bits D12 and/or D13 fail to identify the correct memory block.
- Page map data bits D14 and/or D15 are not set to the correct value.
- Data read from a system memory or a Multibus memory location is not the same as the data previously written to that location.

5506

The MMU user access protection logic failed. One or more of the following conditions occur when a specified area of user memory is accessed.

- A user protection bus error interrupt occurs when the protection logic is disabled.
- A user protection bus error interrupt fails to occur when the protection logic is enabled.
- The MMU context register user protection and/or violation bits fail to set to the correct state.

5507

The MMU write protection logic failed. One or more of the following conditions occur when a write operation is performed on a specified area of user memory.

- A write protection bus error interrupt occurs when the write protection logic is not set.
- A write protection bus error interrupt fails to occur when the write protection logic is set.
- The MMU context register write protection and/or violation bits fail to set to the correct state.

5508

The MMU read protection logic failed. One or more of the following conditions occur when a read operation is performed on a specified area of user memory.

- A read protection bus error interrupt occurs when the read protection logic is not set.
- A read protection bus error interrupt fails to occur when the read protection logic is set.
- The MMU context register read protection and/or violation bits fail to set to the correct state.

5509

The MMU program execution protection logic failed. One or more of the following conditions occur when the MMU diagnostic tries to process an instruction that is stored in a specified area of user memory.

- A program execution bus error interrupt occurs when the instruction is accessed while the protection logic is enabled.
- A program execution bus error interrupt fails to occur when the instruction is accessed while the protection logic is enabled.
- The MMU context register violation, program execution, and/or read protection bits fail to set to the correct state.

7XXX (DK50) Error Codes

The 5.25-inch Disk Controller (DK50) diagnostic error records contain two error code fields and a status field.

ERROR CODE 1 describes the error. Because the two least-significant digits of all DK50 ERROR CODE 1 values mean the same thing in all DK50 error reports, the following ERROR CODE 1 list identifies the two least-significant digits of each DK50 ERROR CODE 1 as XX.

Refer to Table 3-9 for the meaning of the XX values in ERROR CODE 1.

ERROR CODE 2 contains eight status bits and eight error bits. The eight most-significant bits of ERROR CODE 2 are the status bits and the eight least-significant bits of ERROR CODE 2 are the error bits. Figure 3-6 shows the meaning of each bit of ERROR CODE 2.

Each DK50 diagnostic error record contains the following four-byte status field. Figure 3-7 shows the meanings of the DK50 status code values.

STATUS = $XXYY0000

- The eight bits represented by XX are the controller completion code.
- The eight bits represented by YY are the device status code.
- The 16 bits represented by 0000 are always zero.

71XX

The 5.25-inch Disk Controller board failed to correctly complete its on-board firmware 'self-test' program. Refer to Table 3-10 for the meaning of XX. Figure 3-7 shows the 5.25-inch disk controller status codes.

72XX

The 5.25-inch Disk Controller board failed to generate a required interrupt, or generated a wrong interrupt. Refer to Table 3-10 for the meaning of XX. Figure 3-7 shows the 5.25-inch disk controller status codes.

73XX

The 5.25-inch Disk Controller board or the selected 5.25-inch flex disk drive failed to correctly perform one of the following operations.

- Write format
- Write data
- Read data
- Verify previously written data

Refer to Table 3-10 for the meaning of XX. Figure 3-7 shows the 5.25-inch disk controller status codes.

74XX

The 5.25-inch Disk Controller board or the selected 5.25-inch Winchester (hard) disk drive failed to correctly perform one of the following operations.

- Write format
- Write data
- Read data
- Verify previously written data

Refer to Table 3-10 for the meaning of XX. Figure 3-6 shows the meaning of ERROR CODE 2. Figure 3-7 shows the 5.25-inch disk controller status codes.

75XX

The Error Check and Correct test of the 5.25-inch Disk Controller board ECC logic failed. This failure is usually caused by the controller ECC logic, but controller or drive problems may cause the test to fail.

XX identifies the cause of the error. Refer to Table 3-10 for the meaning of XX. Figure 3-6 shows the meaning of ERROR CODE 2. Figure 3-7 shows the 5.25-inch disk controller status codes.

7F81

The MPA diagnostic program cannot be loaded from disk. MPA is required to test the communication controller installed in the system, but there may not be a disk controller installed.

Table 3-10. XXX Values for DK50 Error Code 1 Field

XX CODE	CAUSE OF ERROR
01	The drive returned a bad status. Refer to Table 3-13.
02	The drive has a write fault error.
03	The selected unit is not ready.
04	Seek error.
05	Restore error.
21	The controller returned a bad status. Refer to Table 3-13.
22	The controller failed to generate a required interrupt.
23	System overload. Usually caused by the program.
24	A Multibus parity error occurred.
25	A SCSI bus parity error occurred.
26	The controller returned a busy status.
27	The controller error cannot be identified.
28	The controller failed to complete an operation.
29	Memory access time out error (during DMA).
41	The drive returned an End of Media status.
42	The media is bad.
43	The selected block is bad.
44	A format error occurred.
45	A correctable data error occurred (ECC).
46	An uncorrectable data error occurred (CRC or ECC).
51	The data read is not the same as the data written.
53	The controller failed to detect an ECC error.
81	The controller cannot identify the instruction.
82	The disk address is invalid.
83	The disk parameter is invalid.
F0	The disk is write protected.
F1	The disk device name is invalid.
F2	The specified controller is not in the system.
F3	The boot (load) block is bad.
F4	A media change status was detected.
F5	An operator abort (Control-C key) status was detected.

STATUS BITS								ERROR BITS								STATUS AND ERROR BIT DESCRIPTIONS
D7	D6	D5	D4	D3	D2	D1	D0	D7	D6	D5	D4	D3	D2	D1	D0	
1	X	X	X	0	0	0	X	X	X	X	X	X	X	X	0	Drive is write protected
X	1	X	X	0	0	0	X	X	X	X	X	X	X	X	0	Drive is ready
X	X	1	X	0	0	0	X	X	X	X	X	X	X	X	0	Write fault from drive
X	X	X	1	0	0	0	X	X	X	X	X	X	X	X	0	Seek is complete
X	X	X	X	0	0	0	1	X	X	X	X	X	X	X	0	An error occurred during the last I/O
X	X	X	X	0	0	0	X	1	X	X	X	X	X	X	0	Bad block read
X	X	X	X	0	0	0	X	X	1	X	X	X	X	X	0	CRC or ECC error
X	X	X	X	0	0	0	X	X	X	1	X	X	X	X	0	Can not find deleted data
X	X	X	X	0	0	0	X	X	X	X	1	X	X	X	0	Can not find requested block
X	X	X	X	0	0	0	X	X	X	X	X	1	X	X	0	Can not find data
X	X	X	X	0	0	0	X	X	X	X	X	X	1	X	0	Instruction terminated before completion
X	X	X	X	0	0	0	X	X	X	X	X	X	X	1	0	Can not find track zero

NOTE: Multiple bits may be set. Status bits D3, D2, and D1 are not used. Error bit D0 is not used.

1045

Figure 3-6. DK50 Error Code 2 Bits

STATUS = $XXYY0000

XX BYTE COMPLETION CODE	YY BYTE DEVICE STATUS CODE	CODE DESCRIPTION
00	00	No error
01*	YY	Western Digital Controller 2797 error
02*	YY	Western Digital Controller 1010 error
03*	YY	Buffer 'B' error
04*	YY	Buffer 'A' error
05*	YY	RAM error
06*	YY	Error during RAM to buffer 'A' copy
07*	YY	ROM checksum error
01	YY	Controller error
02	YY	Parameter error
03	YY	Instruction terminated before completion
04	YY	Bad block
05	YY	Deleted data mark
06	YY	Block not found
07	YY	CRC/ECC error
08	YY	Write protect
09	YY	Write fault
10	YY	Time out
11	YY	Host cancel
12	YY	Multibus error
XX	00	Device ready
XX	01	Controller error
XX	02	Parameter error
XX	03	Device is seeking
XX	04	Device not ready
XX	05	Device error

* These codes have these meanings only if error code 1 = 7121

C1033

Figure 3-7. DK50 Status Field Codes

8XXX

Not supported.

9XXX (MPA0) Error Codes

The Multi-Protocol Communication Controller Function (MPA) diagnostic error records use two error codes. ERROR CODE 1 identifies the cause of the error. ERROR CODE 2 is always zero. MPA error records describe errors that occur while testing the communication functions of the MPCA or the communication controller.

The following is a list of all ERROR CODE 1 values that the MPA diagnostic generates.

Note: *The 9FXX error codes in this list are not actually ROM resident Start-Up error codes. These codes are Start-Of-Day error codes that are generated by the MPA communication driver software modules. Because these error codes occur in the same format as the SUS Start-Up diagnostic error codes, they are frequently assumed to be Start-Up diagnostic error codes.*

9000

The MPA board failed the software reset test. This failure is caused by the MPA command register, wrong ROM checksum, or a bad on-board RAM.

9100

The Communications Controller board failed to correctly transfer one or more characters across the Multibus. This failure is usually caused by the MPA output register, input register, or the interrupt vector register. One or more of these registers failed to accept or hold a specific data pattern.

9200

The output data flag bit in the communications controller board status register failed to set.

9300

One of the four least-significant bits of the command register failed to set to the correct state.

9400

The communications controller board failed to complete the start-of-day parameter initialization. The board output register did not accept one of the five bytes of parameter information (dynamic block area address and diagnostic interrupt vector number) or the output data flag failed to reset.

9500

The communications controller board failed to generate a required interrupt after completing its on-board firmware Start-Up diagnostic routines.

9501

The communications controller board input register contains a status that indicates that the board completed its on-board Start-Up diagnostics, but it cannot perform one or more of its required functions. The input status register value is 55. This status may indicate that there are no good Line Interface Modules (LIM) installed. This test must have at least one good LIM connected to the board.

960X

The Line Interface Module (LIM) that is identified by X failed. The test tried five different tests for each LIM. This failure is usually caused by the LIM itself, but may be caused by the MPA circuitry that is associated with this specific LIM. The observed data field identifies the LIM test that failed. Figure 3-8 shows the meaning of the observed data field bits.

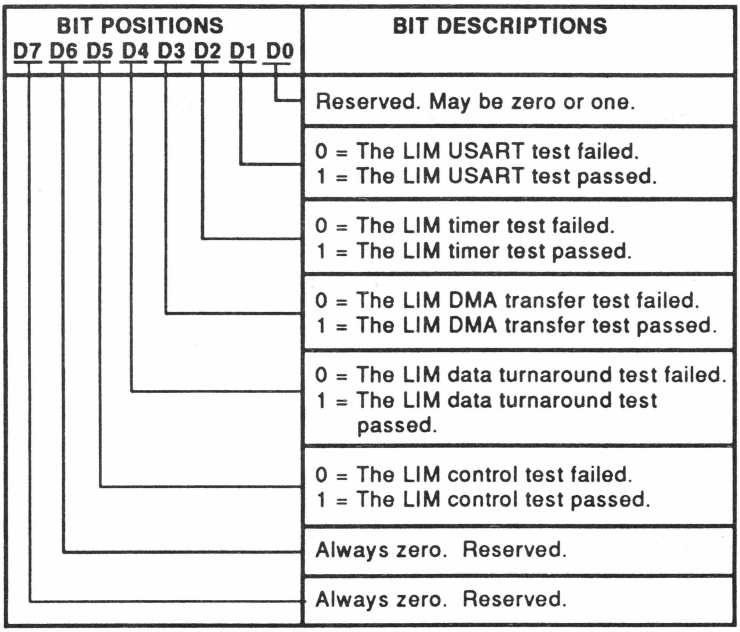

Figure 3-8. MPA Observed Data Field Bits

9F00

The specified controller is not installed in the system.

9F0X

The configure ISR function failed for the channel specified by X.

9F05

The configure ISR function failed for the diagnostic interrupt vector.

9F06

DMA (context 31) address space is not available.

9F07

The function to activate the periodic timer failed.

9F08

The power fail table is full.

AXXX (STP0) Error Codes

The Streaming Tape Controller (STP) diagnostic error records contain two error codes. ERROR CODE 1 identifies the cause of the error. ERROR CODE 2 is always set to zero.

The following is a list of all ERROR CODE 1 values that the STP diagnostic generates.

Note: *The STP0 diagnostic program detects and reports only errors that are caused by the Streaming Tape Controller board installed in the Multibus card rack. The STP0 diagnostic program does not report tape transport errors.*

A101

The STP controller board in the Multibus card rack failed to respond within the required time.

A102

The data returned by one of the STP controller board registers is not the same as the data sent to that register. The observed data field contains the data that the register returned, and the expected data field contains the data that was sent to the register. The ADDRESS 1 field contains the address of the register that failed.

A103

The STP controller board in the Multibus card rack failed to generate a required interrupt.

A104

The STP controller in the Multibus card rack failed to generate an interrupt after reading a filemark.

BXXX (CPC0) Error Codes

Not supported.

COXX (HIO0) Error Codes

The High Performance Serial I/O Controller (HIO or HPSIO) or Communication Controller diagnostic error records contain two error codes.

ERROR CODE 1 identifies the cause of the error. ERROR CODE 1 values C001 through C00D identify errors detected by the SUS Start-Up diagnostics. ERROR CODE 1 values C010 through C07F identify errors detected by the HPSIO on-board level 0 diagnostics.

ERROR CODE 2 identifies the channel that caused the error.

The following is a list of all ERROR CODE 1 values that the HIO diagnostic generates.

C001

The SUS Start-Up diagnostic program detected an HPSIO on-board ROM checksum error.

C002

The SUS Start-Up diagnostic program detected an HPSIO on-board RAM error.

C003

The SUS Start-Up diagnostic program detected an HPSIO mailbox register bit that fails to switch between zero and one.

C004

The SUS Start-Up diagnostic program does not detect a response from any of the HPSIO channels. All channels are bad.

C005

The SUS Start-Up diagnostic program does not detect a pending interrupt following a write instruction to the HPSIO.

C006

The SUS Start-Up diagnostic program did not receive an acknowledgement from the HPSIO following a function request.

C007

The HPSIO failed to reset the interrupt waiting status after the SUS read the mailbox register.

C008

The HPSIO failed to release the mailbox within the required time.

C009

The IOPB (Input/Output Parameter Block) address returned by the HPSIO return log function is not the same as the address sent to the HPSIO.

C00A

The HPSIO return log function failed to write log bytes to system memory.

C00B

The IOPB (Input/Output Parameter Block) address returned by the HPSIO download function is not the same as the address sent to the HPSIO.

C00C

The HPSIO returned a bad status following a download function. The error record status field contains the returned status.

C00D

The HPSIO interrupt generation logic failed.

C00F

The data turnaround test failed. The data received from the HPSIO is not the same as the data sent to the HPSIO.

Note: *The following error codes identify degraded errors that the HPSIO on-board level 0 diagnostics detect. ERROR CODE 2 identifies the failing channel.*

C010

Test 1 detected an address decode logic error.

C020

One or more bits of the DUART Mode Register 1 (MR1) failed to switch between zero and one.

C021

One or more bits of the DUART Mode Register 2 (MR2) failed to switch between zero and one.

C022

One or more bits of the DUART Interrupt Vector Register (IVR) failed to switch between zero and one.

C030

The Stop/Counter instruction failed to reset the DUART counter/timer ISR bit.

C031

The DUART counter/timer failed to count down to zero.

C032

The DUART failed to generate a required interrupt while in the count mode.

C033

The DUART counter/timer interrupt failed to set the counter/timer ISR bit.

C034

The DUART failed to generate a required interrupt while in the timer mode.

C040

The DUART failed to set the TXRDY bit in both the ISR and SR registers.

C041

The DUART failed to set the RXRDY bit in both the ISR and SR registers.

C04B

The DUART failed to generate a TXEMT status.

C04C

The DUART failed to generate a TXRDY status.

C04D

The DUART failed to generate a RXRDY status.

C04E

The DUART generated a wrong status character.

C04F

An unexpected data character was read from the DUART Receiver Holding Register (RHR).

C050

The DUART break handling logic failed to generate a delta break status following a start break instruction.

C051

The DUART delta break interrupt bit failed to reset following a reset break instruction.

C052

A TXRDY status was generated in the break received state following a character out instruction.

C053

The DUART break handling logic failed to generate a delta break status following a stop break instruction.

C054

The DUART failed to generate an RXRDY status following an output, start break, output, stop break sequence.

C055

The DUART failed to generate a required break received status.

C056

The DUART failed to reset the break received status following a reset error status instruction.

C057

The DUART failed to receive an expected break character.

C058

An unexpected status was generated during character transmit between start break and stop break.

C05B

The DUART failed to generate a TXEMT status.

C05C

The DUART failed to generate a TXRDY status.

C05D

The DUART failed to generate an RXRDY status.

C05E

The DUART generated a wrong status character.

C05F

An unexpected data character was read from the DUART Receiver Holding Register (RHR).

C060

The reset receiver instruction failed to reset the RXRDY bit.

C061

The DUART failed to generate an RXRDY interrupt.

C062

A character status error occurred while rotating (popping) the DUART's overrun/full first-in-first-out (FIFO) data stack.

C063

A character status error occurred while rotating (popping) the DUART's overrun first-in-first-out (FIFO) data stack.

C064

The DUART failed to detect a delta break status.

C065

The DUART failed to generate a block mode error status.

C066

An unexpected full ISR bit was set.

C067

An unexpected full ISR bit failed to set.

C068

The DUART failed to detect a full character status.

C069

The DUART failed to detect an overrun character status.

C06A

An unexpected interrupt occurred.

C06B

The DUART failed to generate a required TXEMT status.

C06C

The DUART failed to generate a required TXRDY status.

C06D

The DUART failed to generate a required RXRDY status.

C06E

The DUART generated a wrong status character.

C06F

An unexpected data character was read from the DUART Receiver Holding Register (RHR).

C070

The DUART generated an unexpected interrupt or an unexpected write interrupt during the transfer of a character that was not a special character.

C071

The DUART failed to generate a required write interrupt during the transfer of a special character.

C072

The DUART generated an unexpected interrupt or an unexpected read interrupt during the transfer of a character that was not a special character.

C073

The DUART failed to generate a required read interrupt during the transfer of a special character.

C07B

The DUART failed to generate a TXEMT status.

C07C

The DUART failed to generate a TXRDY status.

C07D

The DUART failed to generate a RXRDY status.

C07E

The DUART generated a wrong status character.

C07F

An unexpected data character was read from the DUART Receiver Holding Register (RHR).

DXYZ (SCS0) Error Codes

The SCS0 diagnostic program detects and reports errors that occur during tests of the following Small Computer System Interface (SCSI) hardware elements:

- F4915 SCSI Controller in the host (main unit) cabinet. This module is frequently referred to as a host adapter.
- F5492/UN-5355-MSU High Performance Mass Storage Controller in the host (main unit) cabinet.
- SCSI Disk or Tape Controller in the disk/tape subsystem cabinet.
- SCSI disk or tape drive(s) in the disk/tape subsystem cabinet.

SCS0 error records contain two error code fields (ERROR CODE 1 and ERROR CODE 2) and a four-byte status code field (wwxxyyzz). The following list identifies all valid values of the SCS0 ERROR CODE 1 field. Table 3-12 identifies the meaning of the SCS0 ERROR

CODE 2 field values. Table 3-13 identifies the meaning of the SCS0 four-byte status field values.

D100

The SCSI Multibus controller (High Performance Mass Storage Controller/Mass Storage Controller/Host Adapter) self-test Start-Up diagnostic test failed.

Table 3-11. SCSI Self-Test Error Code 2 Values

CODE	DESCRIPTION
0	No error information
1	ROM checksum error
2	On-board microprocessor RAM error
3	Power-Up pass error
4	Host busy error
5	Multibus busy output error
6	Memory read command error
7	Memory write command error
8	DMA sequencer command error
9	DMA counter error
A	End of DMA error
B	Memory watchdog timer error
C	Program interrupt error
D	Reserved
E	SCSI interface chip error
F	Power-Up or host busy error

D200

The SCSI Multibus controller Start-Up diagnostic interrupt test failed.

D300

The SCSI Multibus controller Start-Up diagnostic port data turnaround test failed.

D400

The SCSI Multibus controller Start-Up diagnostic DMA write test failed.

D500

The SCSI Multibus controller (Host Adapter) Start-Up diagnostic DMA read test failed.

D6d0

The SCSI device (disk or tape) subsystem controller's on-board self-test program failed. The value of d identifies the SCSI device controller.

D7d0

The SCSI device (disk or tape) subsystem controller's on-board unit test program failed. The value of d identifies the SCSI device controller.

D8du

The selected SCSI peripheral device (disk or tape) failed to correctly perform a write operation. The value of d identifies the SCSI device controller. The value of u is the SCSI peripheral device unit number.

D9du

The selected SCSI peripheral device (disk or tape) failed to correctly perform a read operation. The value of d identifies the SCSI device controller. The value of u is the SCSI peripheral device unit number.

Table 3-12. SCS0 Error Code 2 Field

ERROR CODE	CODE DESCRIPTION
01	Bad drive status
02	A seek time out occurred
03	Unit not ready
04	Drive not ready
05	Drive failed to return 'drive selected'
07	Multiple drives responded to a select
10	Address ECC error
11	All recovery actions have failed to read good data
12	Two index detects (sector not found)
13	No data sync found
15	Seek error
17	Drive write protect switch is on
20	Host requested an illegal command be executed
21	Bad board status
22	Service request timeout
23	System overload
24	Multibus parity error
26	Controller busy
27	Controller error cannot be identified
28	Operation timeout error
29	DMA memory access timeout error
41	End of media
42	Bad media status
43	Bad block on disk
44	IDB failure detected
45	Correctable data error (soft ECC)
46	Uncorrectable data error
47	ECC chip failure detected
48	Self test failed
50	Error discrepancy between DM and ECC
51	Error correction using ECC chip was incorrect
52	Recovery disabled
74	ECC error
75	Parity error
80	Function aborted by a selective reset from the host
81	Function aborted by controller, host is not functioning
82	Host aborted the function, reason unknown
A6	Media check condition
A7	Start of day unit test failed
A8	MIC chip failure detected
A9	Start of day re-assign block check error
AA	8155 port failure detected

Table 3-12. SCS0 Error Code 2 Field (cont.)

ERROR CODE	CODE DESCRIPTION
B5	Host transmission error detected
B6	Host error detected on write
B7	Reselection timeout
C0	Drive failed to reset drive selected
C1	Selection was attempted with another device selected
C2	The wrong drive responded to a selected command
C3	Switch set to invalid drive type in controller
C5	Seek error status received from the drive
C6	Drive error detected while read/write in progress
C8	Drive faulted, general SMD-0 error status
CA	A drive error was detected during start of day testing
F0	Write protect on the disk
F1	Bad device name specified
F2	Controller not present
F3	Bad boot block encountered

STATUS = WWXXYYZZ

- WW - Mail box status
- XX - Host adapter error status
- YY - Vendor unique error status
- ZZ - Extended sense key error status

Table 3-13. SCS0 Status Field

WW	DESCRIPTION
00	Empty (no mail)
01	Successful completion
02	Successful completion - Error logged in Host Adapter Successful completion - Error status
03	Terminated - Failure logged in HAES
04	Terminated - SCSI bus reset
05	Terminated - Command block error
06	Open receive buffer terminated - Invalid command received
07-0F	Reserved

Table 3-13. SCS0 Status Field (cont.)

WW	DESCRIPTION
10	Mail box free
11-7F	Reserved
80	Unexpected reselection
81	ID error
82	Abort received
83	Bus device reset received
84	Bus reset
85	Host adapter error
86	Unexpected selection
87	Mail box error
88-FF	Reserved
XX	**DESCRIPTION**
00	No error
01	Host memory error
02	Select/Reselect timeout
03	Bus parity error
04	Message parity error received or message retried
05	Message reject sent
06	Message reject received
07	Message not sent
08	Reserved
09	Host adapter error
0A	Buffer bounds error
0B	Unexpected disconnection
0C	Invalid bus phase
0D	Initiator detected error received
0E	Abort received
0F	Bus device reset received
YY	**DESCRIPTION**
00	No sense information for the designated unit.
01	Recoverable error, the last I/O completed successfully, a recovery action was required
02	Not ready
03	Media error
04	Hardware error
05	Illegal request
06	Unit attention
07	Data protect
08	Aborted command
ZZ	**DESCRIPTION**
	RESERVED

EXYZ (FPP) Error Codes

The Floating-Point Processor (FPP) diagnostic error records contain two error codes; error code 1 and error code 2.

The four-character error code 1 format (EXYZ) provides the following information about the error.

- E - Identifies this error as a Floating-Point Processor (FPP) error.
- X - The value of X identifies the FPP0 test that detected the error.
- Y - The value of Y identifies the type of data that was being handled when the error occurred.
- Z - The value of Z identifies the type of FPP operation that was being performed when the error occurred.

This section does not describe the meaning of the error code 2 values because these error codes only identify failures of the FPP chip's internal registers. Information gained from knowing which internal register failed does not change the repair procedures or provide any additional capability to correct the problem.

The following list describes the FPP0 error code 1 values.

E002

A Bus error occurred during a Floating-Point Processor instruction. A failure of the FPP oscillator is a possible cause of the error.

E00B

A Floating-Point Processor instruction was sent to the FPP, but no response was returned to the PMC microprocessor. This error occurs if the FPP and/or the FPP oscillator is not installed or not functioning properly.

E1YZ

The FPP data movement test failed. Refer to Table 3-14 for the meaning of Y. Refer to Table 3-15 for the meaning of Z.

E2YZ

The FPP program control test failed. Refer to Table 3-14 for the meaning of Y. Refer to Table 3-15 for the meaning of Z.

E3YZ

The FPP function test or the transcendental function test failed. Refer to Table 3-14 for the meaning of Y. Refer to Table 3-15 for the meaning of Z.

Table 3-14. Y Values

Y Value	Description
1	Byte data error
2	Word data error
3	Long word data error
4	Single precision data error
5	Double precision data error
6	Extended precision data error
7	Packed decimal data error
8	ROM constant error
9	Status error

Table 3-15. Z Values

Z Value	Z Description
1	Register load error
2	Register/memory or memory/register movement error
3	Add, multiply, or exponent function error
4	Transcendental (log, sine, cosine, etc) function error
5	Branch on condition error
6	Exception or trap error

UNISYS

U 5000/35-55
Release 3.00.01
UP-14802

RESPONSE CARD

Please help us to help you. Take a moment to fill out and mail this postage-paid card so that we may better serve your needs. Thank you.

1. Is this manual (Yes No) or this library (Yes No) clear and understandable?

2. Is this manual (Yes No) or this library (Yes No) difficult?

3. Are there books in the library that need our attention? (Yes No) If yes, please list in comments area below by book number and give a short description of the problem.

4. How long have you been using this manual?

5. Have you found technical errors in the manual? (Yes No) If yes, please specify in the comments area below.

6. Are topics in the manual presented in a logical order for your use? (Yes No)
   If not, please suggest changes in comments area below.

7. Are there any topics covered briefly or not covered at all that you need information on? Please specify below.

8. Are there other topics that need to be included in the index? Please specify below.

DETACH HERE

Comments: _____

_____

_____

_____

_____

_____

_____

_____

_____

_____

_____

_____

_____

(More space for comments on reverse)

Would you like someone to contact you directly to discuss documentation? If yes, please give your name and telephone number. _____

_____

No Postage Necessary If Mailed in the United States

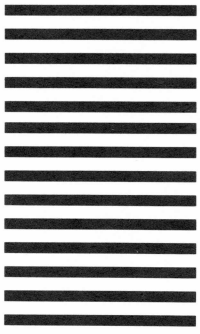

BUSINESS REPLY MAIL

FIRST CLASS MAIL PERMIT NO. 2540 SALT LAKE CITY, UT

Postage will be paid by addressee:

UNISYS

NCG Salt Lake Publications
ATTN: Operating Systems Publications B2E06
322 North 2200 West
Salt Lake City, UT 84116-9973 USA

FOLD HERE

DETACH HERE

Comments: _____

PLEASE FOLD AND FASTEN

DO NOT STAPLE